Inserted elements for the precast industry

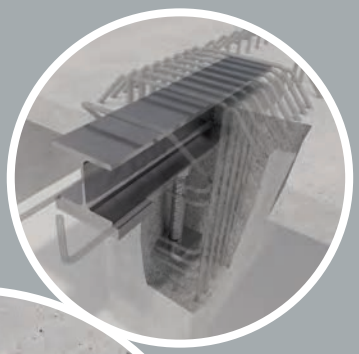

Product catalogue 2022

PFEIFER

Sehr geehrte Kundinnen, sehr geehrte Kunden,

Do you value continuous improvement and are you constantly looking for optimization potential in your processes? In this context, do you also check whether your lifting and transport processes can run more safely, flexibly and economically? You will preferably work with a partner who is also there for you after the delivery? Then contact us, because that is exactly what we aspire to and what drives us. Our comprehensive Expert knowledge is based on decades of experience in rope and lifting technique. Through the intensive analysis of processes, we know when and where we can provide advice. Your satisfaction is included always our goal.

We are at your side from planning and design to internal handling to delivery and maintenance – as your partner at eye level.

Our mobile testing service assumes responsibility for testing for you and guarantees maximum security. You can also benefit from our know-how and attend our specialist seminars.

As a family-run company with a long tradition, we have been planning and acting long-term and sustainably for generations – this also applies to our customer relationships. Whether personal advice for standard applications or extreme individual challenges – we offer you planning security, quality, flexibility and economical solutions, even for the most demanding applications.

In addition to competence, proximity and reliability, we rely on continuous further development of our range. Discover in this Catalog, in addition to the proven products, current innovations, further developments and improvements.

Visit us online at www.pfeifer.info or make an appointment directly a personal consultation appointment - gladly also at your place.

Only those who keep up with the times and plan today for tomorrow will be successful in the long run. With this in mind, let us discover new paths together.

We look forward to you!

Alexander Zanocco, Managing Director

Selected products. Intelligent solutions.

Our product range is hand-picked. Selected by specialists who have a background in the field and know your industry. We know what is important in practice and do everything we can to offer you the optimal solution for every task.

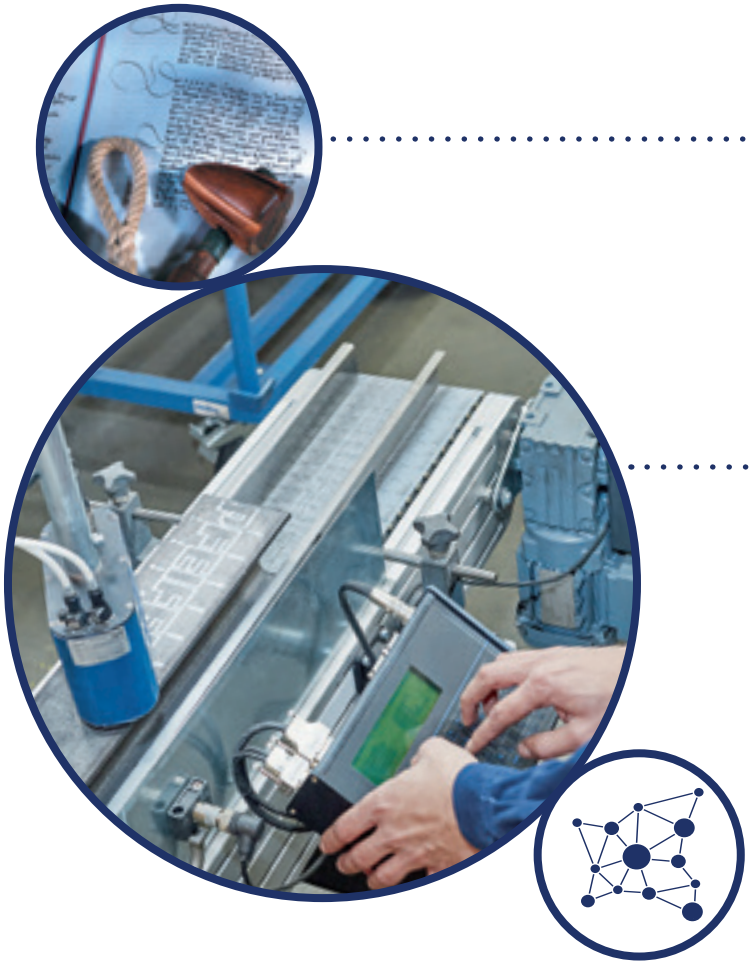

400 years of experience

PFEIFER has concerned itself with the securing, lifting and movement of loads for 12 generations. Armed with this knowledge, we select a proven and contemporary assortment for you each year. We support you in every project phase with our comprehensive expert knowledge and know-how.

100 % quality

We offer only products that we have subjected to precise tests ourselves. Our quality checks encompass the incoming inspection of the material, the manufacturing process and the testing of the manufactured products. Our group-wide QA management system is certified to both DIN EN ISO 9001 and BS OHSAS 18001.

19 countries

PFEIFER is located at 33 locations in 19 countries.
We monitor developments in other regions, examine new ideas and procure worldwide. To always offer you the best and most economical solution.

More service. More partnership.

Solution-oriented
We set benchmarks.
PFEIFER develops market-leading solutions for connections that you can rely on.
We are there for you and accompany you through any challenge, however complex.

Reliable
We keep our promises.
You can rely on our responsible action, excellent consulting and fast reaction and delivery times.

Complete solutions for the precast concrete industry – your partner for unitised construction

PFEIFER offers standard and sophisticated special solutions worldwide for the efficient and safe movement and connection of precast concrete elements. As a partner, we support you with individual project concepts, excellent inspection services and practical specialist seminars Our goal is to generate long-term, sustainable added value for our customers.

Know-how

Pfeifer is your competent contact for system solutions in the entire lifecycle of precast concrete elements.
Thanks to decades of experience and sound process knowledge in the field of precast element production, we offer our customers qualified services for the best possible planning security. Our products are subject to strict internal quality control and regular quality checks by recognised testing institutes.

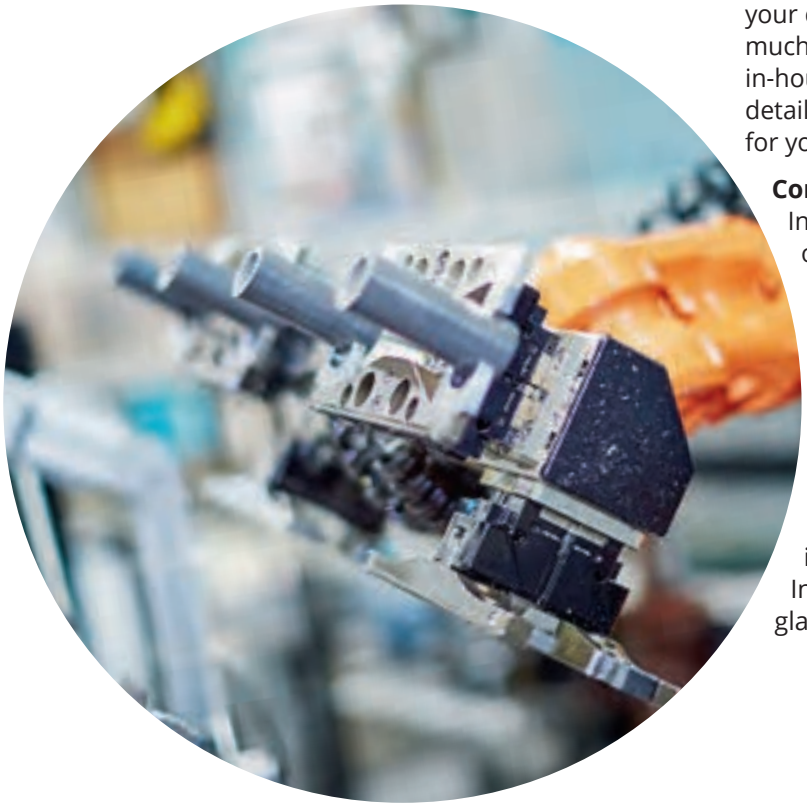

Innovation

Best possible solutions for the most demanding customer applications – that's what we always strive for. For that reason our products, our logistics and our ordering and business processes are subject to continuous further development.

Advice and support

Application advice:
A competent team of engineers and construction technicians from the head office in Memmingen will answer your questions about our products, your application and much more besides. They are linked directly to our in-house development department to ensure the most detailed technical considerations and offer best advice for your particular application.

Consultant network:
In addition, a group of civil engineers with a structural orientation are available as contacts in particular for structural engineers and other engineers. Our specially trained supporting engineers are there for you in a wide variety of locations – you can rely on that. All application cases are solved reliably and efficiently by our competent team.

Field service:
Our sales representatives are at your disposal for a personal sales talk on site. In addition, they will inform you about current topics and new products. In case of individual questions or problems, we'll be glad to visit you at your plant.

Optimise your processes for the production, transport and assembly of your precast elements

Production equipment

- Load lifting attachments and turnover devices
- Lifting keys for concrete inserts
- Attachment devices and attachment points
- Hoists and winches
- Fall protection equipment

Transport by truck

- Lashing equipment
- Anti-slip underlays
- Edge protection systems
- Lashing points

Daily service requirements

PFEIFER offers an extensive inspection service for ropes and lifting equipment.
Our service technicians and testing vehicles are in operation throughout Germany.
Central contacts and several service centres additionally ensure short routes.

- Work equipment tests
- Work equipment management (PDF)
- Rope service
- Repair service
- Rental service

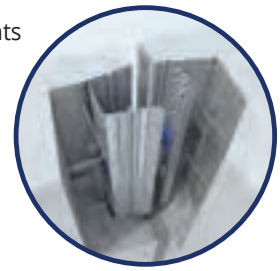

Precast concrete elements

- Lifting and transporting
- Fastening and assembly
- Connecting and supporting
- Façade and reinforcement
- Slim floor construction
- Consulting and support

Installation on the building site

- Load lifting attachments and turnover devices
- Lifting keys for concrete inserts
- Attachment devices and attachment points
- Hoists and winches
- Fall protection equipment

Find out more online:
www.pfeifer.info/beton-fertigteilindustrie

Our catalogue for your precast plant – also online!

Concrete cast-in parts

Attachment equipment, lashing equipment and lifting technology

Table of contents

PFEIFER Seil- and Hebetechnik

Foreword 2
Selected products. Intelligent solutions. 3
Complete solutions for the precast concrete industry – your partner for unitised construction 4

Symbol legend 9

New products 10

General remarks 13

Lifting 15

Component recommendations – Anchors for lifting 16

Threaded anchor system 18
Allround Anchor long 20
Allround-Anchor kurz 21
HL Base Anchor 22
Waved Anchor long 23
Waved Anchor short 25
Super Waved Anchor 26
HL Waved Anchor 27
Bar Anchor 28
Bar Anchor cropped 29
Socket 30
Flat Steel Anchor 31
Bolt Anchor 33
Lifting Loop 34
Flared Lifting Loop 35
Lifting Loop, tapered 36
Flared lifting loop, tapered 37
HL Lifting Loop 38
Swivel Eye 39
Special Lifting Loop 40
SAS Lifting Loop 41
Super Lifter 42
HL Lifting Key 43
Data Clips 44
Fixing Bolts for threaded anchor system 47
Fixing Screw for threaded anchor system 50
Recess Disc for threaded anchor system 51
Magnetic Disc 53
Cover Cap 54
Cover Plate 56
External Plate for threaded anchor system 58
External Cap 59
Repair kit for slabs 60
Repair kit for walls 61
Repair kit accessories 62
Adapter 63
Reworking Screw 64
Combination options – Threaded anchor system 65
Dimensioning table – Threaded Anchor 68
Dimensioning table – Threaded Anchor for stairs 70

Spherical head anchor system 72
DR Anchor 74
DR Anchor with eye 76
WK Anchor long 77
WK Anchor short 78
WK Bar Anchor 79
WK Bar Anchor cropped 80
WK Quicklift 81
WK Moulding Insert 82
Fixing Screw for spherical head anchor system 83
Dimensioning tables – Spherical Head Anchor 84

Wire rope loop anchor system 88
BS Anchor 90
Bent Loop 91
BS Hook 92
BS Capstan Ring 93
BS Moulding Insert 94
Fixing Screw for wire rope loop anchor system 95
Dimensioning table – Wire Rope Loop Anchor 96

Light-Weight Concrete Anchor/Brickwork Anchor 98
LB anchor and lifting loop 100
Brickwork Anchor 101

Transporting 103

Lashing anchor system 104
Lashing Anchor 106
Lashing Point 108
Fixing Bolt Shallow without pin for lashing anchor 109
Fixing Screw for Lashing Anchor 110
Cover Cap and External Cap for Lashing Anchor 111

Fastening 113

Insert anchors 114
Insert Anchor 115
DB Base Anchor 116
DB Waved Anchor 117

Anchor bolt G1-K 118
Socket Dowel with cross hole 119
Socket Dowel with cross hole and nailing plate 120
Socket Dowel with crimped end 121
Socket Dowel with crimped end and nailing plate 122
Socket Dowel with angular end 123
Polyamide Socket 124
Nail Disc for Socket Dowel 125
Nail Plug for Polyamide Socket 126
External Plate for Insert Anchor 127

Steel anchors for subsequent fastening 128
UCS Concrete Screw 130
UltraCut FBS II concrete screw 131
MAX express anchor 133
IMC express anchor 135

Standard parts 138

Anchor Plates 142
APL Anchor Plate 144

Mounting 149

Fastener for Push-Pull Props 150
Fastener for push-pull props, MoFi 152
MoFi fastener for push-pull props, assembled 153
Fixing bolt for MoFi 154
Concrete screws for fasteners for push-pull props 155
Bolt anchors for fasteners for push-pull props 156
Magnet Fixing, MoFi 157
Plastic Fixing. MoFi 158
Plug. MoFi 159
Dimensioning tables – MoFi 160

Fixing Bracket System 166
Fixing Bracket System 167
LCON Fixing Bracket 168
Dimensioning tables – LCON 169
Selection aid – fixing bracket system 173

Lift Mounting Anchor 174
Load Eye 176
LSF Lifting Loop 177
LSV Lifting Loop 178
LSG Lifting Loop 179
LSP Lifting Loop 180
Selection aid – Lift Mounting Anchor 181
Personal protection system 182
Personal protection system 183
DB Attachment Point PSA 184
PSA Eye Bolt 185
PSA Fixing Bolt/Cover Cap 186
PSA Recess Disc 187

Connect 189

Wire rope loop connections 190
VS® ISI Bar/Rail approved 192
VS® BZ Rail approved 193
VS® T Bar/Rail constructive 194
VS® W Rail constructive 195
VS® Slim Box EASYFILL approved 196
VS® Box EASYFILL constructive 197
VS® Box CLASSIC constructive 198
FS Box LIGHT approved 199
VS®-accesories 200
Component recommendations – Wire rope loop connections 201
Combination options – Wire rope loop connections 201
VS®-ISI-System^{3D} fire prevention 202
To the free dimensioning software 203

Screw connection system 204
PCC Column Shoe 206
PWS Wall Shoe 207
PWC Wall Shoe 208
PGS/G1 Foundation Anchor 209
PGS/G2 Foundation Anchor 210
PGS/G3 Foundation Anchor 211
PGS/G1-K Foundation Anchor 215
PGS/G2-K, G3-K and G4-K foundation anchors for PCC 216
PGS/G1-DK Foundation Anchor 217
PGS/H2 Foundation Anchor 218
PGS/H4 Foundation Anchor 219
Foundation anchor sets 222
with UP shim plate for PWC 222
PH-MU Female Bar 224
PVB/PGV Connect Bolt 225
PAP Connect Bolt 226
PCC Positioning Socket 227
PCC Retaining Bush 228
Fixing screw for screw connection system 229
Moulding Insert, corner installation 230
Moulding Insert, side installation 232

Thread protection plugs
for foundation anchors 233
Cover Plate 234
Component recommendations
Screw connections 235
Combination options – Assembly accessories 235

Bearings 237

Steel Bearing 238
PS-A steel bearing, one-piece 240

Staircase bearing system 242
VarioSonic SLE staircase end bearing 244
VarioSonic SL intermediate staircase bearing 245

Footstep sound 247

Sound insulation elements 248
NL footstep sound plate 250
NF footstep sound plate 251
NB footstep sound plate 252
PD stair mandrel 253
D36 NT stair mandrel set 254
Individual components of D36 stair mandrel 255
Schall-ISOBOX TSB®-T set 257
Schall-ISOBOX TSB®-BT set 258
Schall-ISOBOX TSB®-MB 259
Schall-ISOBOX TSB®-F 260
TSB®-BK/BWK reinforcement cages
for Schall-ISOBOXES 261
Schall-ISODORN HQW® set 262
Schall-ISODORN HQW® ST 263
REI 120 fire protection sleeve
for Schall-ISODORN HQW® 264

Facade 267

Bearing Anchor and Shear Connector 268
Cylinder Anchor 270
Flat Anchor 272
Delta Anchor 275
SPA Sandwich Panel Anchor 276
Anchor Pin 278
Clip-on Pin 280
Clip-On Stirrup 281

Reinforcing 283

Reinforcement continuity system 284
Straight Female Bar 286
Straight Male Bar 296
Male Bar in special design 298
Threaded Connection Bolt 302
Coupling Socket 303
Right-Left-Thread Connect Bolt 304
Reducing Bolt 305
Reducing Socket 306
Positioning Connector 307
Welding Socket 308
End Anchoring Plate 309
Torque wrench 310
Nail Disc and PH Nail Disc 311

Slim floor constructions 313

Hybridbeam® 314
Hybridbeam® BHM 316
Hybridbeam® BHR 317

Replacement Beam 318
BHRW Replacement Beam short 320
BHRW Replacement Beam long 321

Services

Technical seminars 322
PFEIFER Mobile Services 324
Back you up 324
CAD library 325
Tender specification texts 325

References 326

PFEIFER Group 330

Dimensioning software 332

Keyword index 337

Symbol legend

Symbols

CE marking with daeclaration of performance

European Technical Assessment –
Europe-wide valid approval

General Building Authority approval mark

TÜV SÜD checked

Seismics – stresses due to earthquake transferable, regulated in approval

Fire protection – meets special requirements, regulated in approval or certificate

Sound insulation – meets special requirements, regulated in approval or certificate

Rostfrei® stainless steel – meets special requirements for corrosion protection

Caution! Warning sign: health hazard.
Observe safety information!

Certificates

ISO 9001
Zertifiziertes Qualitätsmanagementsystem
www.tuev-sued.de/ms-zert

DIN EN ISO 9001:2015

Manufacturer's qualification for the welding of reinforcing steel according to DIN EN ISO 17660-1/-2:2006

Certificate welding quality requirements according to DIN EN ISO 3834-2:2006

ISO 50001
Zertifiziertes Energiemanagementsystem
www.tuev-sued.de/ms-zert

DIN EN ISO 50001:2011

Welding certificate for steel structures according to EN 1090-2:2008+A1:2011

Production control according to EN 1090-1:2009+A1:2011

New products

Discover the new items in our constantly developing portfolio here.

The Pakon product assortment enables full, all-round footstep sound protection for stairs and landings and is a perfect supplement to PFEIFER's Connecting And Lifting Systems range. Ensure quiet in staircases and the adjacent residential or office spaces with Pakon bearings and sound insulation mats.

The PWC wall shoe serves as a connecting element for wall joints. The wall shoe consists of a solid base plate with a central main hole, a housing made of side plates and two welded-on anchoring bars.

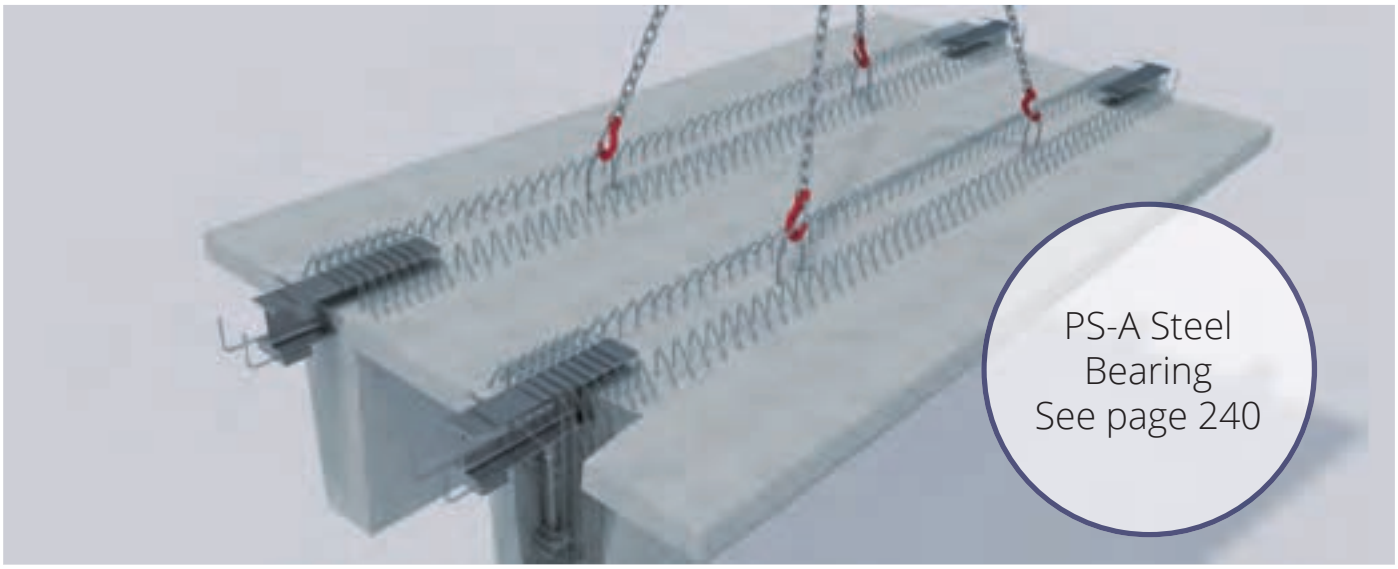

The PFEIFER Steel Bearings have been enabling the simple, safe and extremely fast planning, manufacture and installation of precast concrete slabs for many years. Over 2 million m^2 of installed ceiling area speak for themselves! An optimised product variant, our free and revised dimensioning software and our comprehensive technical support guarantee you an inexpensive, fast and safe construction project.

More new items ...

Flared lifting loop, tapered – see page 37

MoFi fastener for push-pull props, assembled – see page 153

WLsystec® MoFi magnet fixing – see page 157

G2-/G3-/G4-K foundation anchor – see page 216

FS-Box LIGHT now with ETA – see page 199

General remarks

Ordering information

In order to ensure a smooth and error-free ordering and invoicing process, we kindly ask you to state the complete ref. no. when ordering.

Service hours

Monday-Thursday
07:30–17:00

Friday
07:30–16:00

Prices subject to change

For articles in stainless steel versions, we reserve the right to change prices in the event of any alloy surcharges. Furthermore, we reserve the right to charge and adjust a raw material surcharge for all articles. The currently valid raw material and alloy surcharges can be found at www.pfeifer.info.

Prices

All prices are ex works, plus the alloy or raw material surcharges valid on the day of delivery and the statutory VAT.

Minimum order value

The minimum order value for small orders is € 200.00 net.

We reserve the right to charge a processing fee if the minimum order value is not reached.

Reservation of acceptance

Acceptance of orders for listed products is generally subject to the availability of the goods.

Ordering sizes

All prices in this product catalogue always apply in combination with the indicated packing unit as a minimum purchase quantity. We have to charge a processing fee per item for quantities that differ from the packaging units.

Packing

Normal packaging is included in the price.

Euro pallets and mesh boxes will be charged for unless exchanged. Subject to technical changes, special agreements and errors.

- Euro pallets € 17.00 each
- Mesh boxes € 80.00 each

Shipping – road carriage

Packages up to a weight of 30 kg and a maximum length of 1.5 m are sent by parcel service. Shipments exceeding 30 kg or longer than a max. length of 1.5 m will be dispatched by a freight company. Air freight and sea freight upon agreement

Freight[3)]

Freight costs according to expenditure.

Returns

Returns are possible only after prior consultation. In principle, a processing fee amounting to 25 % of the net value of the goods will be deducted, but at least € 50.00. The goods must be returned at the customer's expense. Custom-made products are excluded from being returned.

To speed up processing, please enclose a copy of the delivery note or request a return note from us.

With the publication of this PFEIFER product catalogue, all previous price lists become invalid.

This catalogue is valid from 01/03/2022.

We kindly ask you to enquire separately for items that are not included in this product catalogue.

In principle, the currently valid General Terms and Conditions (www.pfeifer.info/de/agb/) apply.

We reserve the right to make technical changes, special agreements and errors.

Lifting

Threaded anchor system p. 18

The threaded anchor system consists of lifting anchors and lifting keys as lifting points, as well as a wide range of accessories. The components are screwed together. The system is suitable for the transport of the most diverse precast concrete elements.

Spherical head anchor system p. 72

The main focus of the spherical head anchor system for transporting precast concrete elements is on applications in which speed of attachment is paramount.
A component can be attached easily and quickly by simply threading the slot groove of the lifting key into the anchor head protruding from the concrete.

Wire rope loop anchor system p. 88

The wire rope loop anchor system is the ideal solution for the cost-effective transport of heavy loads. The system offers anchors with working load limits up to 990 kN (99 t) per anchor. This allows even the heaviest bridge elements and girders to be transported and moved economically.

Light-weight concrete anchor p. 98

The light-weight concrete anchors have been specially developed for the transport of wall elements made of porous lightweight concrete.

Brickwork anchor p. 98

The brickwork anchor is intended for the transport of precast masonry panels such as walls and slabs.

Component recommendations – Anchors for lifting

Anchor	Component						
	Precast wall[1)]	Sandwich wall	Light-weight concrete wall	Masonry wall	L-shaped wall	Slab/panel	TT slabs
Allround Anchor long	✓					✓	✓
Allround Anchor short						✓	
HL Base Anchor							
Waved Anchor long	✓					✓	✓
Waved Anchor short						✓	
Super Waved Anchor	✓						
HL Waved Anchor							
Bar Anchor	✓					✓	
Bar Anchor cropped		✓					
Socket (anchor socket)	✓					✓	
Flat Steel Anchor						✓	
SAS Flat Steel Anchor					✓		
Bolt Anchor					✓	✓	
SAS Bolt Anchor					✓		
DR Anchor	✓					✓	
DR Anchor with eye	✓						
WK Anchor long	✓						✓
WK Anchor short						✓	
WK Bar Anchor	✓						
WK Bar Anchor cropped		✓					
BS Anchor	✓					✓	✓
Bent Loop					✓	✓	
LB Anchor			✓				
Brickwork Anchor				✓			

[1)] Pw = precast concrete parts

	Component							
	Foundation	Balcony	Staircase/ platform	Beam/ girder/ joist	Column/ rod-shaped component	Pipe/ container	Shaft/shell segment	Room module/ garage
			✓	✓				
	✓	✓	✓					
							✓	
		✓	✓	✓	✓			✓
	✓				✓			
							✓	✓
							✓	
		✓	✓	✓	✓		✓	✓
			✓					✓
	✓	✓						
						✓	✓	
	✓	✓	✓					
						✓	✓	
	✓	✓				✓		
				✓	✓			
	✓	✓			✓			
					✓			✓
	✓		✓	✓				

Threaded anchor system

The threaded anchor system consists of various lifting anchors for installation in precast concrete components and the associated lifting keys. The anchor and lifting key are simply screwed together and guarantee a safe and technically valid lifting point on the component.

Your advantages

- Working load limits from 5 kN (0.5 t) to 220 kN (22 t)
- A solution for every application
- Robust round thread
- Colour coding
- Extensive range of accessories

Guideline

- According to VDI BV-BS 6205 in interpretation of the EC Machinery Directive 2006/42/EC
- Safe work equipment as defined in health & safety legislation according to BetrSichV (Operational Safety Ordinance)

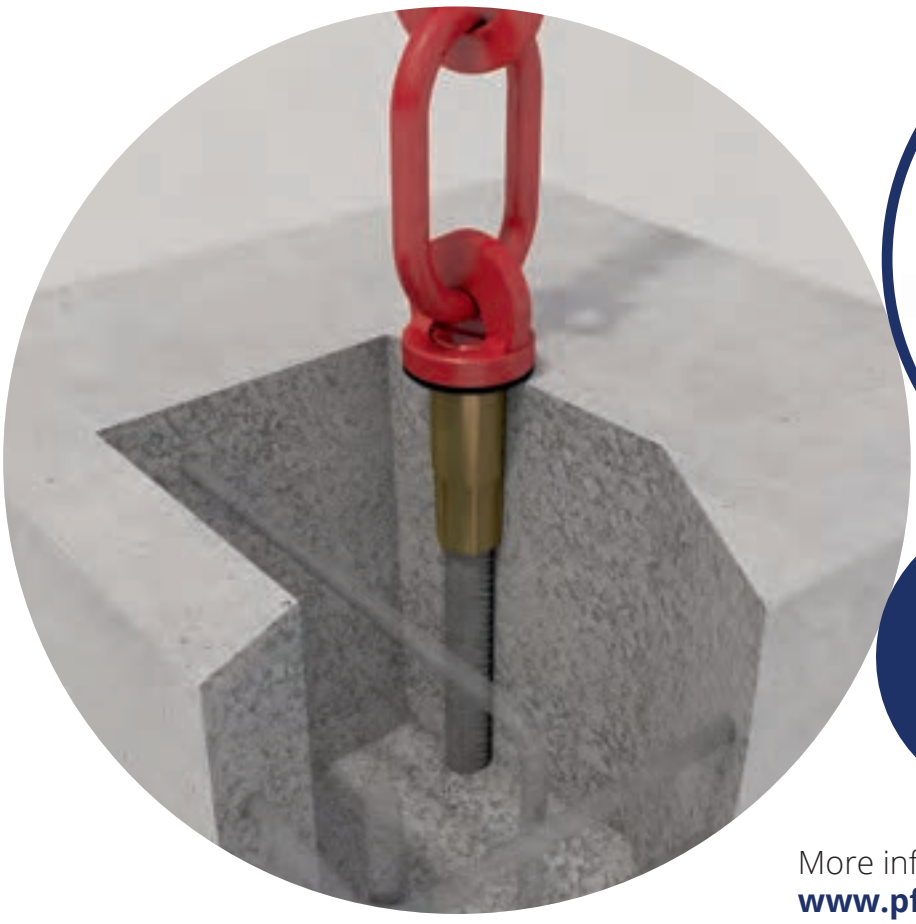

More information can be found at
www.pfeifer.info/thread-system

Threaded anchor system

Anchor

Allround Anchor long 20
Allround-Anchor kurz 21
HL Base Anchor 22
Waved Anchor long 23
Waved Anchor short 25
Super Waved Anchor 26
HL Waved Anchor 27
Bar Anchor 28
Bar Anchor cropped 29
Socket 30
Flat Steel Anchor 31
Bolt Anchor 33

Lifting Key

Lifting Loop 34
Flared Lifting Loop 35
Lifting Loop, tapered 36
Flared lifting loop, tapered 37
HL Lifting Loop 38
Swivel Eye 39
Special Lifting Loop 40
SAS Lifting Loop 41
Super Lifter 42
HL Lifting Key 43

Accesories

Data Clips 44
Fixing Bolts for threaded anchor system 47
Fixing Screw for threaded anchor system 50
Recess Disc for threaded anchor system 51
Magnetic Disc 53
Cover Cap 54
Cover Plate 56
External Plate for threaded anchor system 58
External Cap 59
Repair kit for slabs 60
Repair kit for walls 61
Repair kit accessories 62
Adapter 63
Reworking Screw 64

Technical information

Combination options – Threaded anchor system 65
Dimensioning table – Threaded Anchor 68
Dimensioning table – Threaded Anchor for stairs 70

Allround Anchor long

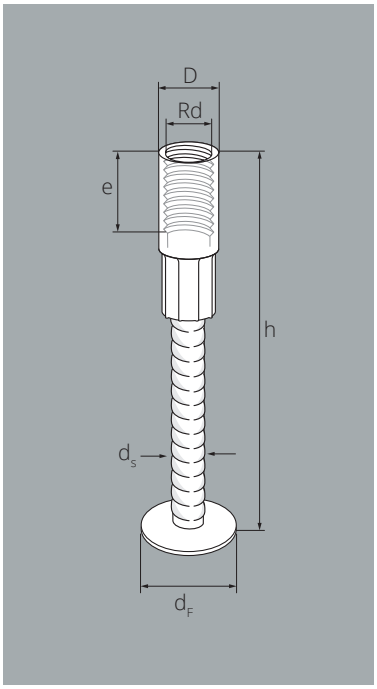

Use

- Threaded lifting anchor with swaged anchor foot for lifting concrete elements
- Front-sided installation in the component
- To attach, screw a suitable lifting key into the threaded socket.

Your advantages

- Application all-rounder:
- minimised stock keeping of different anchor versions
- Anchor foot enables easy positioning/turning of the anchor in the formwork
- Short anchor lengths for less interference in the component

Component recommendation

✓ Precast wall ✓ Column/rod-shaped component ✓ Slab/panel ✓ TT slabs

✓ Stairway/platform ✓ Beam/girder/joist

Allround Anchor – long – galvanized

Ref. no.	Type	Colour coding-Guideline data clip (see page 43)	Thread size	Dimensions D [mm]	d_F [mm]	d_s [mm]	e [mm]	h [mm]	Load carrier [pieces]	Packing unit [pieces]	Weight approx. [kg/100 pcs]	Price plus RTZ [EUR/pcs]
368715	ARL-ZN-12	Pastel orange	Rd 12	15.0	24	8	22	110	1000	100	7.10	**2.36**
368717	ARL-ZN-14	Pure white	Rd 14	18.0	30	10	25	130	800	50	12.70	**2.57**
368718	ARL-ZN-16	Flame red	Rd 16	21.0	36	12	27	150	1600	50	20.30	**2.99**
368719	ARL-ZN-18	Light pink	Rd 18	24.0	42	14	34	175	500	50	32.10	**3.80**
368720	ARL-ZN-20	Pastel green	Rd 20	27.2	38	16	35	210	1200	25	51.80	**4.55**
368721	ARL-ZN-24	Anthracite grey	Rd 24	31.0	38	16	43	235	600	20	59.20	**4.80**
368722	ARL-ZN-30	Emerald green	Rd 30	39.5	46	20	56	310	350	1	121.40	**11.35**
368723	ARL-ZN-36	Light blue	Rd 36	47.0	55	25	67	385	350	1	215.00	**15.55**
368724	ARL-ZN-42	Silver grey	Rd 42	54.0	70	28	80	470	250	1	330.00	**24.50**
368725	ARL-ZN-52	Sulphur yellow	Rd 52	67.0	70	32	97	650	100	1	590.00	**59.70**

CE

Allround Anchor – long – stainless steel socket

Ref. no.	Type	Colour coding-Guideline data clip (see page 43)	Thread size	Dimensions D [mm]	d_F [mm]	d_s [mm]	e [mm]	h [mm]	Load carrier [pieces]	Packing unit [pieces]	Weight approx. [kg/100 pcs]	Price plus RTZ [EUR/pcs]
369611	ARL-VA-12	Pastel orange	Rd 12	15.0	24	8	22	110	–	100	7.50	**7.95**
369613	ARL-VA-14	Pure white	Rd 14	18.0	30	10	25	130	–	50	13.10	**9.15**
369614	ARL-VA-16	Flame red	Rd 16	21.0	36	12	27	150	200	50	22.40	**11.00**
369615	ARL-VA-18	Light pink	Rd 18	24.0	42	14	34	175	–	50	33.70	**15.90**
369616	ARL-VA-20	Pastel green	Rd 20	27.2	38	16	35	210	100	25	53.60	**19.65**
369617	ARL-VA-24	Anthracite grey	Rd 24	31.0	38	16	43	235	200	20	61.70	**20.55**
369618	ARL-VA-30	Emerald green	Rd 30	39.5	46	20	56	310	200	1	125.80	**49.50**
369619	ARL-VA-36	Light blue	Rd 36	47.0	55	25	67	385	100	1	226.70	**71.20**
369620	ARL-VA-42	Silver grey	Rd 42	54.0	70	28	80	470	50	1	355.10	**109.50**
369621	ARL-VA-52	Sulphur yellow	Rd 52	67.0	70	32	97	650	50	1	632.50	**152.50**

Rostfrei CE

Allround-Anchor short

Use

- Threaded lifting anchor with swaged anchor foot for lifting concrete elements
- Top-sided installation in the building component or precast stairs
- To attach, screw a suitable lifting key into the threaded socket.

Your advantages

- Application all-rounder:
- minimised stock keeping of different anchor versions
- Anchor foot enables easy positioning/turning of the anchor in the formwork
- Short anchor lengths for less interference in the component

Component recommendation

✓ Slab/panel ✓ Stairway/platform ✓ Foundation ✓ Balcony

✓ Beam/girder/joist ✓ Column/rod-shaped component

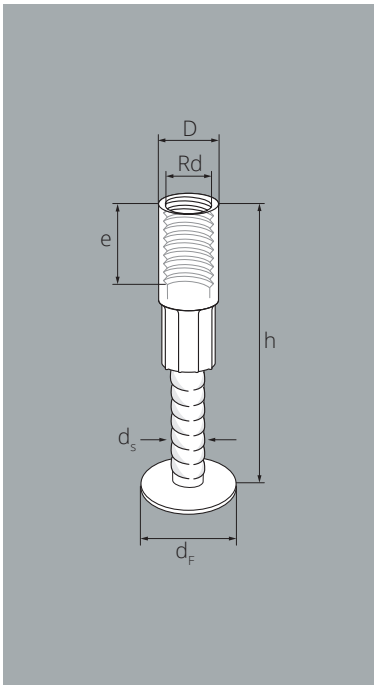

Allround Anchor – short – galvanized steel socket

Ref. no.	Type	Colour coding-Guideline data clip (see page 43)	Thread size	Dimensions					Load carrier	Packing unit	Weight approx.	Price plus RTZ
				D [mm]	d_F [mm]	d_s [mm]	e [mm]	h [mm]	[pieces]	[pieces]	[kg/100 pcs]	[EUR/pcs]
441268	ARK-ZN-20	Pastel green	Rd 20	27.2	38	16	35	170	500	25	44.30	**4.30**
441269	ARK-ZN-24	Anthracite grey	Rd 24	31.0	38	16	43	170	1000	25	48.20	**4.55**
368796	ARK-ZN-30	Emerald green	Rd 30	39.5	46	20	56	170	500	1	85.90	**10.40**
368797	ARK-ZN-36	Light blue	Rd 36	47.0	55	25	67	225	200	1	153.50	**15.10**
368798	ARK-ZN-42	Silver grey	Rd 42	54.0	70	28	80	265	200	1	231.00	**22.35**
368799	ARK-ZN-52	Sulphur yellow	Rd 52	67.0	70	32	97	350	100	1	405.50	**57.60**

CE

Allround Anchor – short – stainless steel socket

Ref. no.	Type	Colour coding-Guideline data clip (see page 43)	Thread size	Dimensions					Load carrier	Packing unit	Weight approx.	Price plus RTZ
				D [mm]	d_F [mm]	d_s [mm]	e [mm]	h [mm]	[pieces]	[pieces]	[kg/100 pcs]	[EUR/pcs]
441271	ARK-VA-20	Pastel green	Rd 20	27.2	38	16	35	170	500	25	46.10	**19.40**
441272	ARK-VA-24	Anthracite grey	Rd 24	31.0	38	16	43	170	1000	25	50.70	**20.30**
369622	ARK-VA-30	Emerald green	Rd 30	39.5	46	20	56	170	500	1	90.30	**48.50**
369623	ARK-VA-36	Light blue	Rd 36	47.0	55	25	67	225	200	1	165.20	**70.60**
369624	ARK-VA-42	Silver grey	Rd 42	54.0	70	28	80	265	200	1	256.10	**107.50**
369625	ARK-VA-52	Sulphur yellow	Rd 52	67.0	70	32	97	350	100	1	448.00	**150.50**

Rostfrei CE

HL Base Anchor

Use

- Threaded lifting anchor with swaged anchor foot for lifting concrete shell segments
- Front-sided installation in the component
- To attach, screw a suitable HL lifting key into the threaded socket, see pages 37 and 42

Your advantages

- Specially developed for lifting shell segments with high dead weight and low wall thickness
- Anchor foot enables easy positioning/turning of the anchor in the formwork
- Short anchor lengths for less interference in the component

Component recommendation

✓ Shaft/shell segment

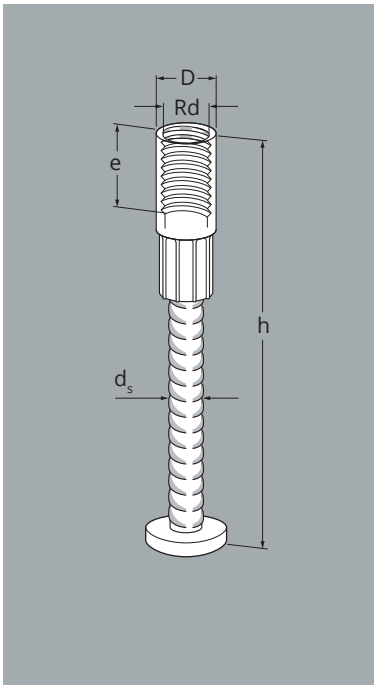

HL Base Anchor – galvanized steel socket – for shell segments

Ref. no.	Type	Colour coding-Guideline data clip (see page 44)	Thread size	Dimensions h [mm]	D [mm]	d_s [mm]	e [mm]	Packing unit [pieces]	Weight approx. [kg/pcs]	Price plus RTZ [EUR/pcs]
308977	**FHL-42/125**	**white**	Rd 42	400	54	32	80	1	3.70	**on request**

CE

Waved Anchor long

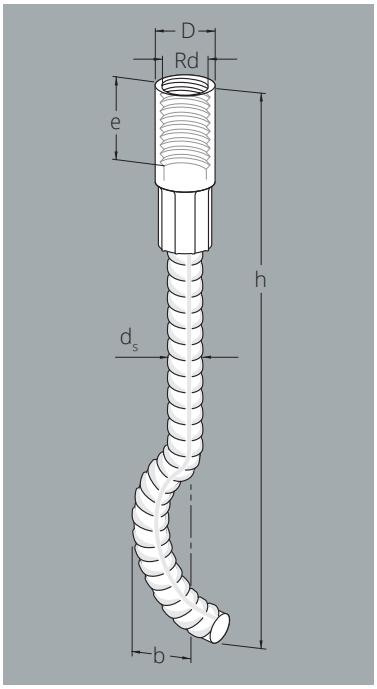

Use

- Threaded lifting anchor with corrugated bar for lifting concrete elements
- Front-sided installation in the component
- To attach, screw a suitable lifting key into the threaded socket.

Your advantages

- Careful load application by corrugated bar for thin components
- Short anchor lengths for less interference in the component

Component recommendation

- ✓ Precast wall
- ✓ Column/rod-shaped component
- ✓ Room module/ garage
- ✓ Balcony
- ✓ Beam/girder/joist
- ✓ TT slabs
- ✓ Slab/panel

Waved Anchor – long – galvanized steel socket

Ref. no.	Type	Colour coding-Guideline data clip (see page 43)	Thread size	Dimensions					Load carrier	Packing unit	Weight approx.	Price plus RTZ
				D [mm]	b [mm]	d_s [mm]	e [mm]	h [mm]	[pieces]	[pieces]	[kg/100 pcs]	[EUR/pcs]
117432	WAL-ZN-12	Pastel orange	Rd 12	15.0	15	8	22	137	1000	100	7.50	**1.75**
117440	WAL-ZN-14	Pure white	Rd 14	18.0	20	10	25	170	800	50	14.00	**2.03**
117445	WAL-ZN-16	Flame red	Rd 16	21.0	21	12	27	216	1600	50	24.80	**2.66**
117460	WAL-ZN-18	Light pink	Rd 18	24.0	25	14	34	235	500	50	39.00	**3.65**
117464	WAL-ZN-20	Pastel green	Rd 20	27.2	25	16	35	257	1200	20	53.00	**4.60**
117474	WAL-ZN-24	Anthracite grey	Rd 24	31.0	30	16	43	360	600	20	73.20	**5.40**
117483	WAL-ZN-30	Emerald green	Rd 30	39.5	40	20	56	450	350	1	145.00	**9.05**
117490	WAS-ZN-30	Emerald green	Rd 30	39.5	40	20	56	900	200	1	255.00	**12.60**
117492	WAL-ZN-36	Light blue	Rd 36	47.0	50	25	67	570	350	1	268.00	**15.85**
117496	WAS-ZN-36	Light blue	Rd 36	47.0	50	25	67	900	100	1	396.00	**19.80**
117498	WAL-ZN-42	Silver grey	Rd 42	54.0	50	28	80	620	250	1	374.00	**24.55**
117499	WAS-ZN-42	Silver grey	Rd 42	54.0	50	28	80	1000	100	1	575.00	**31.30**
117505	WAL-ZN-52	Sulphur yellow	Rd 52	67.0	70	32	97	880	100	1	750.00	**62.30**
117506	WAS-ZN-52	Sulphur yellow	Rd 52	67.0	70	32	97	1200	50	1	921.00	**68.70**
135375	WAL-ZN-56	Pastel orange	Rd 56	70.0	80	36	80	1200	50	1	1100.00	**69.30**
135376	WAL-ZN-60	Flame red	Rd 60	76.0	80	40	85	1410	50	1	1500.00	**78.40**

CE

Waved Anchor – long – socket zinc flake coated

Ref. no.	Type	Colour coding-Guideline data clip (see page 43)	Thread size	Dimensions					Load carrier	Packing unit	Weight approx.	Price plus RTZ
				D [mm]	b [mm]	d_s [mm]	e [mm]	h [mm]	[pieces]	[pieces]	[kg/100 pcs]	[EUR/pcs]
279710	WAS-ZB-24	Anthracite grey	Rd 24	31.0	30	16	43	360	600	20	73.20	**7.55**
278582	WAS-ZB-30	Emerald green	Rd 30	39.5	40	20	56	450	350	1	145.00	**10.95**
282408	WAS-ZB-36	Light blue	Rd 36	47.0	50	25	67	570	350	1	268.00	**21.70**
282409	WAS-ZB-42	Silver grey	Rd 42	54.0	50	28	80	620	250	1	374.00	**30.70**
282410	WAS-ZB-52	Sulphur yellow	Rd 52	67.0	70	32	97	880	100	1	765.00	**68.70**

CE

Waved Anchor – long – stainless steel socket

Ref. no.	Type	Colour coding-Guideline data clip (see page 43)	Thread size	Dimensions D [mm]	b [mm]	d_s [mm]	e [mm]	h [mm]	Load carrier [pieces]	Packing unit [pieces]	Weight approx. [kg/100 pcs]	Price plus RTZ [EUR/pcs]
117439	WAL-VA-12	Pastel orange	Rd 12	15.0	15	8	22	137	–	100	7.50	**5.90**
117442	WAL-VA-14	Pure white	Rd 14	18.0	20	10	25	170	–	50	14.00	**7.20**
117453	WAL-VA-16	Flame red	Rd 16	21.0	21	12	27	216	300	50	24.80	**9.80**
117463	WAL-VA-18	Light pink	Rd 18	24.0	25	14	34	235	–	50	39.00	**15.30**
117472	WAL-VA-20	Pastel green	Rd 20	27.2	25	16	35	257	100	20	53.00	**18.25**
117481	WAL-VA-24	Anthracite grey	Rd 24	31.0	30	16	43	360	200	20	73.20	**21.45**
117491	WAL-VA-30	Emerald green	Rd 30	39.5	40	20	56	450	200	1	145.00	**50.40**
117497	WAL-VA-36	Light blue	Rd 36	47.0	50	25	67	570	100	1	270.00	**72.40**
117502	WAL-VA-42	Silver grey	Rd 42	54.0	50	28	80	620	50	1	390.00	**109.50**
117510	WAL-VA-52	Sulphur yellow	Rd 52	67.0	70	32	97	880	50	1	757.00	**140.50**

Waved Anchor short

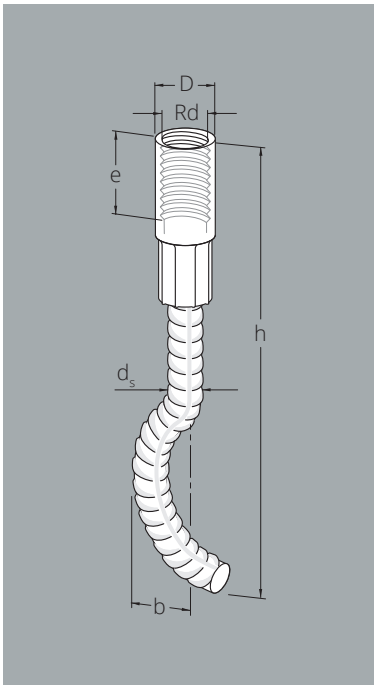

Use

- Threaded lifting anchor with corrugated bar for lifting concrete elements
- Top-sided installation in panel-like components of medium thickness
- Longitudinal installation in bar-shaped structural elements
- To attach, screw a suitable lifting key into the threaded socket.

Your advantages

- Careful load application by corrugated bar for low splitting effect
- Small minimum edge and axis distances

Component recommendation

✓ Plate ✓ Column/rod-shaped component ✓ Stairway/platform

✓ Beam/girder/joist ✓ Foundation

Waved Anchor – short – galvanized steel socket

Ref. no.	Type	Colour coding-Guideline data clip (see page 43)	Thread size	Dimensions D [mm]	b [mm]	d_s [mm]	e [mm]	h [mm]	Load carrier [pieces]	Packing unit [pieces]	Weight approx. [kg/100 pcs]	Price plus RTZ [EUR/pcs]
117511	WAK-ZN-12	Pastel orange	Rd 12	15.0	15	8	22	108	1000	100	6.50	1.72
117513	WAK-ZN-14	Pure white	Rd 14	18.0	20	10	25	130	600	50	12.00	2.02
117515	WAK-ZN-16	Flame red	Rd 16	21.0	21	12	27	172	1600	50	20.50	2.40
117519	WAK-ZN-18	Light pink	Rd 18	24.0	25	14	34	175	500	50	29.00	3.60
117521	WAK-ZN-20	Pastel green	Rd 20	27.2	25	16	35	192	1000	25	44.00	4.25
117523	WAK-ZN-24	Anthracite grey	Rd 24	31.0	30	16	43	250	500	20	60.00	5.20
117525	WAK-ZN-30	Emerald green	Rd 30	39.5	40	20	56	300	500	1	110.00	8.75
117528	WAK-ZN-36	Light blue	Rd 36	47.0	50	25	67	382	200	1	204.00	15.10
117531	WAK-ZN-42	Silver grey	Rd 42	54.0	50	28	80	450	200	1	300.00	23.50

CE

Waved Anchor – short – stainless steel socket

Ref. no.	Type	Colour coding-Guideline data clip (see page 43)	Thread size	Dimensions D [mm]	b [mm]	d_s [mm]	e [mm]	h [mm]	Load carrier [pieces]	Packing unit [pieces]	Weight approx. [kg/100 pcs]	Price plus RTZ [EUR/pcs]
117512	WAK-VA-12	Pastel orange	Rd 12	15.0	15	8	22	108	1000	100	6.50	5.90
117514	WAK-VA-14	Pure white	Rd 14	18.0	20	10	25	130	600	50	12.00	7.15
117517	WAK-VA-16	Flame red	Rd 16	21.0	21	12	27	172	1600	50	20.50	9.50
117520	WAK-VA-18	Light pink	Rd 18	24.0	25	14	34	175	500	50	29.00	15.25
117522	WAK-VA-20	Pastel green	Rd 20	27.2	25	16	35	192	1000	25	40.00	18.15
117524	WAK-VA-24	Anthracite grey	Rd 24	31.0	30	16	43	250	500	20	60.00	20.90
117527	WAK-VA-30	Emerald green	Rd 30	39.5	40	20	56	300	500	1	111.00	49.10
117530	WAK-VA-36	Light blue	Rd 36	47.0	50	25	67	380	200	1	204.00	70.10
117532	WAK-VA-42	Silver grey	Rd 42	54.0	50	28	80	450	200	1	300.00	107.00

Rost frei CE

Super Waved Anchor

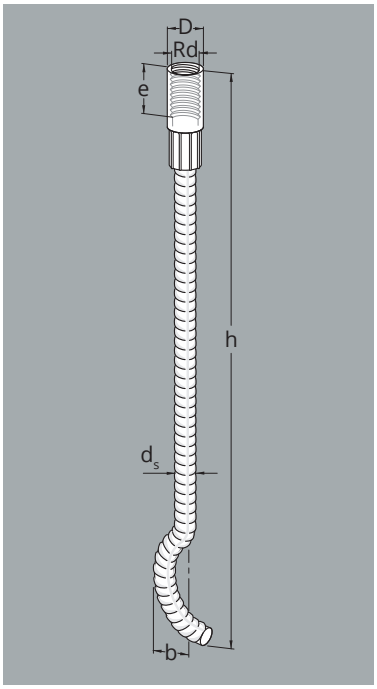

Use

- Threaded lifting anchor with corrugated bar for lifting very thin-walled concrete elements
- Front-sided installation in the component
- To attach the specially designed Super Lifter, screw it into the threaded socket

Your advantages

- Careful load application by corrugated bar for low splitting effect
- Significantly increased working load limit compared to long waved anchor
- Reduced socket dimensions for slim design
- Special thread with shortened screw-in time
- Incorrect screwing in of usual lifting keys excluded by design

Component recommendation

- ✓ Precast wall
- ✓ Column/rod-shaped component
- ✓ Room module/garage
- ✓ Shaft/shell segment

Super Waved Anchor – galvanized steel socket

Ref. no.	Type	System size	Thread size	Dimensions					Load carrier	Packing unit	Weight approx.	Price plus RTZ
				D [mm]	b [mm]	d_s [mm]	e [mm]	h [mm]	[pieces]	[pieces]	[kg/pcs]	[EUR/pcs]
186896	**SWA-ZN-55**	Z55	Rd 22	36	40	20	35	680	100	1	2.10	**16.35**
186897	**SWA-ZN-110**	Z110	Rd 32	55	50	28	50	890	150	1	5.20	**35.90**
186898	**SWA-ZN-220**	Z220	Rd 48	70	40	40	60	1300	50	1	14.50	**68.40**

CE

HL Waved Anchor

Use

- Threaded lifting anchor with corrugated bar for lifting concrete shell segments
- Front-sided installation in the component
- To attach, screw a suitable HL lifting key into the threaded socket, see pages 37 and 42

Your advantages

- Specially developed for lifting shell segments with high dead weight and low wall thickness
- Careful load application by corrugated bar for thin components
- Short anchor lengths for less interference in the component

Component recommendation

✓ Shaft/shell segment

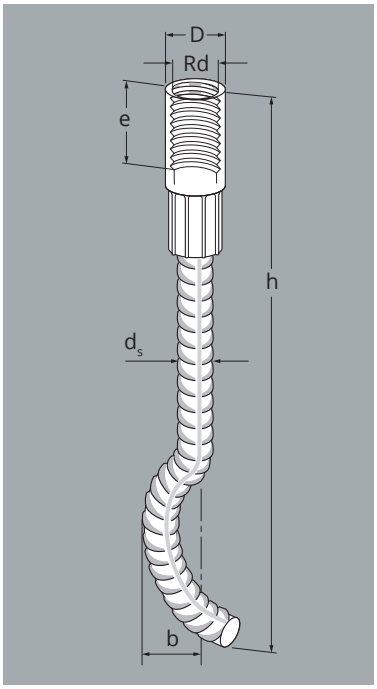

HL Waved Anchor – galvanized steel socket – for shell segments

Ref. no.	Type	Colour coding-Guideline data clip (see page 44)	Thread size	Dimensions h [mm]	D [mm]	d_s [mm]	e [mm]	b [mm]	Load carrier [pieces]	Packing unit [pieces]	Weight approx. [kg/pcs]	Price plus RTZ [EUR/pcs]
264190	**WHL-52/200**	green	Rd 52	750	67	36	97	70	100	100	7.60	**on request**

CE

Bar Anchor

Use

- Threaded lifting anchor with straight bar for lifting concrete elements
- Front-sided installation in the component

Your advantages

- Long bond area allows for very narrow components
- Easy installation even with dense reinforcement layout
- Custom lengths possible

Component recommendation

- ✓ Precast wall
- ✓ Column/rod-shaped component
- ✓ Shaft/shell segment
- ✓ Slab/panel
- ✓ Room module/garage

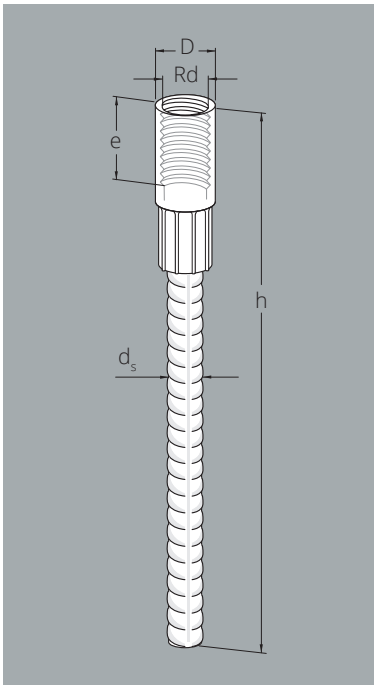

Bar Anchor – stainless steel galvanized

Ref. no.	Type	Colour coding-Guideline data clip (see page 43)	Thread size	Dimensions D [mm]	d_s [mm]	e [mm]	h [mm]	Load carrier [pieces]	Packing unit [pieces]	Weight approx. [kg/100 pcs]	Price plus RTZ [EUR/pcs]
117539	STA-ZN-12	Pastel orange	Rd 12	15.0	8	22	195	–	50	10.00	**1.86**
117569	STA-ZN-14	Pure white	Rd 14	18.0	10	25	235	–	50	18.00	**2.19**
117579	STA-ZN-16	Flame red	Rd 16	21.0	12	27	280	500	50	30.00	**2.66**
117594	STA-ZN-18	Light pink	Rd 18	24.0	14	34	305	–	25	43.00	**3.70**
117604	STA-ZN-20	Pastel green	Rd 20	27.2	16	35	350	300	20	66.00	**5.00**
117614	STA-ZN-24	Anthracite grey	Rd 24	31.0	16	43	400	300	20	78.00	**6.05**
117630	STA-ZN-30	Emerald green	Rd 30	39.5	20	56	510	300	1	159.00	**9.00**
117636	STS-ZN-30	Emerald green	Rd 30	39.5	20	56	900	200	1	258.00	**12.45**
117650	STA-ZN-36	Light blue	Rd 36	47.0	25	67	690	200	1	319.00	**17.40**
117643	STS-ZN-36	Light blue	Rd 36	47.0	25	67	1100	200	1	463.00	**20.85**
117658	STA-ZN-42	Silver grey	Rd 42	54.0	28	80	840	100	1	487.00	**27.80**
146075	STS-ZN-42	Silver grey	Rd 42	54.0	28	80	1100	100	1	605.00	**31.30**
117662	STA-ZN-52	Sulphur yellow	Rd 52	67.2	32	97	915	100	1	766.00	**60.90**
146076	STS-ZN-52	Sulphur yellow	Rd 52	67.2	32	97	1500	100	1	1105.00	**69.30**

CE

Bar Anchor – stainless steel socket

Ref. no.	Type	Colour coding-Guideline data clip (see page 43)	Thread size	Dimensions D [mm]	d_s [mm]	e [mm]	h [mm]	Load carrier [pieces]	Packing unit [pieces]	Weight approx. [kg/100 pcs]	Price plus RTZ [EUR/pcs]
117564	STA-VA-12	Pastel orange	Rd 12	15.0	8	22	195	–	50	10.00	**6.00**
117570	STA-VA-14	Pure white	Rd 14	18.0	10	25	235	–	50	18.00	**7.40**
117592	STA-VA-16	Flame red	Rd 16	21.0	12	27	280	–	50	30.00	**9.90**
117598	STA-VA-18	Light pink	Rd 18	24.0	14	34	305	–	25	45.00	**15.35**
117607	STA-VA-20	Pastel green	Rd 20	27.2	16	35	350	300	20	66.00	**18.35**
117620	STA-VA-24	Anthracite grey	Rd 24	31.0	16	43	400	400	20	78.00	**22.20**
117638	STA-VA-30	Emerald green	Rd 30	39.5	20	56	510	200	1	159.00	**51.10**
117656	STA-VA-36	Light blue	Rd 36	47.0	25	67	690	100	1	319.00	**73.40**
117661	STA-VA-42	Silver grey	Rd 42	54.0	28	80	840	100	1	487.00	**111.50**
117663	STA-VA-52	Sulphur yellow	Rd 52	67.2	32	97	915	100	1	766.00	**143.00**

Rostfrei CE

Bar Anchor cropped

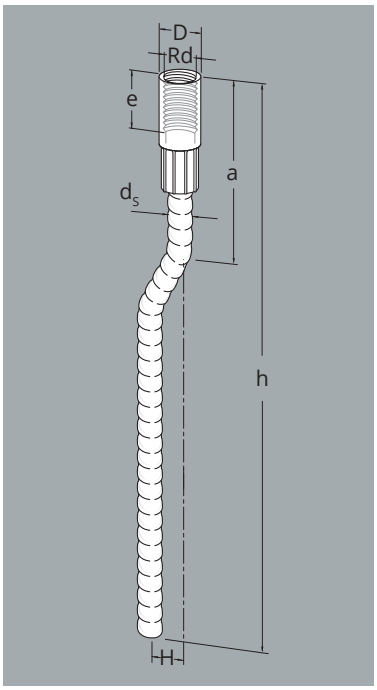

Use

- Threaded lifting anchor with cropped bar for lifting three-layer sandwich panels
- Front-sided installation in the component
- To attach, screw a suitable lifting key into the threaded socket.

Your advantages

- The load is attached exactly above the centre of gravity, so no tilting of the sandwich panels during lifting
- Long bond area allows for very thin load bearing layers

Component recommendation

✓ Sandwich wall

Bar Anchor – cropped – galvanized steel socket – for sandwich panels

Ref. no.	Type	Colour coding-Guideline data clip (see page 43)	Thread size	Dimensions						Load carrier	Packing unit	Weight approx.	Price plus RTZ
				D [mm]	d_s [mm]	a [mm]	e [mm]	H [mm]	h [mm]	[pieces]	[pieces]	[kg/100 pcs]	[EUR/pcs]
261980	STG-ZN-20	Pastel green	Rd 20	27.2	16	100	35	100	650	100	1	115.00	**8.40**
261981	STG-ZN-24	Anthracite grey	Rd 24	31.0	16	110	43	120	700	100	1	126.00	**9.55**
261982	STG-ZN-30	Emerald green	Rd 30	39.5	20	155	56	120	870	100	1	247.00	**15.60**
258575	STG-ZN-36	Light blue	Rd 36	47.0	25	155	67	120	1100	100	1	474.00	**25.75**
258576	STG-ZN-42	Silver grey	Rd 42	54.0	28	210	80	125	1200	50	1	662.00	**38.50**
258577	STG-ZN-52	Sulphur yellow	Rd 52	67.2	32	260	97	140	1400	50	1	1065.00	**71.20**

CE

Bar Anchor – cropped – stainless steel socket – for sandwich panels

Ref. no.	Type	Colour coding-Guideline data clip (see page 43)	Thread size	Dimensions						Load carrier	Packing unit	Weight approx.	Price plus RTZ
				D [mm]	d_s [mm]	a [mm]	e [mm]	H [mm]	h [mm]	[pieces]	[pieces]	[kg/100 pcs]	[EUR/pcs]
263924	STG-VA-20	Pastel green	Rd 20	27.2	16	100	35	100	650	100	1	115.00	**22.35**
263925	STG-VA-24	Anthracite grey	Rd 24	31.0	16	110	43	120	700	100	1	126.00	**25.90**
263926	STG-VA-30	Emerald green	Rd 30	39.5	20	155	56	120	870	100	1	247.00	**58.20**
263927	STG-VA-36	Light blue	Rd 36	47.0	25	155	67	120	1100	100	1	474.00	**81.30**
263928	STG-VA-42	Silver grey	Rd 42	54.0	28	210	80	125	1200	50	1	662.00	**122.00**
263929	STG-VA-52	Sulphur yellow	Rd 52	67.2	32	260	97	140	1400	50	1	1065.00	**155.00**

Rostfrei CE

Socket

Use

- Threaded lifting anchor with cross hole for lifting concrete elements
- Load is introduced via additional retention reinforcement, which is threaded through the cross hole
- Front-sided installation in the component
- To attach, screw a suitable lifting key into the threaded socket.

Your advantages

- Wide range of applications
- Back anchoring geometrically flexible

Component recommendation

✓ Precast wall
✓ Column/rod-shaped component
✓ Slab/panel
✓ Room module/garage
✓ Stairway/platform

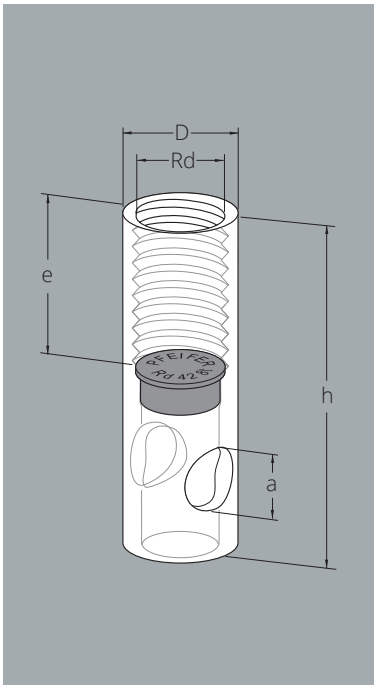

Socket – galvanized steel

Ref. no.	Type	Colour coding-Guideline data clip (see page 43)	Thread size	Dimensions D [mm]	a [mm]	e [mm]	h [mm]	Load carrier [pieces]	Packing unit [pieces]	Weight approx. [kg/100 pcs]	Price plus RTZ [EUR/pcs]
116863	H-ZN-12	Pastel orange	Rd 12	15.0	8.0	22	40	700	100	2.00	**1.59**
116871	H-ZN-14	Pure white	Rd 14	18.0	10.5	25	47	–	100	4.00	**1.89**
116883	H-ZN-16	Flame red	Rd 16	21.0	13.0	27	54	2000	100	6.70	**2.27**
116893	H-ZN-18	Light pink	Rd 18	24.0	13.0	34	65	–	100	11.00	**2.92**
116901	H-ZN-20	Pastel green	Rd 20	27.2	15.5	35	69	2000	100	15.00	**3.15**
116908	H-ZN-24	Anthracite grey	Rd 24	31.0	18.0	43	78	1500	100	19.00	**4.10**
116916	H-ZN-30	Emerald green	Rd 30	39.5	22.5	56	103	1500	30	43.00	**7.25**
116924	H-ZN-36	Light blue	Rd 36	47.0	27.5	67	125	300	25	71.00	**13.30**
116931	H-ZN-42	Silver grey	Rd 42	54.0	32.0	80	145	160	20	104.00	**21.75**
116939	H-ZN-52	Sulphur yellow	Rd 52	67.2	40.0	97	195	150	8	235.00	**52.30**

CE

Socket – stainless steel

Ref. no.	Type	Colour coding-Guideline data clip (see page 43)	Thread size	Dimensions D [mm]	a [mm]	e [mm]	h [mm]	Load carrier [pieces]	Packing unit [pieces]	Weight approx. [kg/100 pcs]	Price plus RTZ [EUR/pcs]
116865	H-VA-12	Pastel orange	Rd 12	15.0	8.0	22	40	700	100	2.00	**6.05**
116875	H-VA-14	Pure white	Rd 14	18.0	10.5	25	47	–	100	4.00	**8.50**
116889	H-VA-16	Flame red	Rd 16	21.0	13.0	27	54	2000	100	7.80	**10.90**
116894	H-VA-18	Light pink	Rd 18	24.0	13.0	34	65	–	100	10.50	**16.40**
116902	H-VA-20	Pastel green	Rd 20	27.2	15.5	35	69	2000	100	14.50	**17.85**
116909	H-VA-24	Anthracite grey	Rd 24	31.0	18.0	43	78	1500	100	19.00	**23.65**
116917	H-VA-30	Emerald green	Rd 30	39.5	22.5	56	103	1500	30	42.00	**36.00**
116925	H-VA-36	Light blue	Rd 36	47.0	27.5	67	125	300	25	71.00	**81.00**
116933	H-VA-42	Silver grey	Rd 42	54.0	32.0	80	145	160	20	104.00	**121.50**
116940	H-VA-52	Sulphur yellow	Rd 52	67.2	40.0	97	195	150	8	235.00	**154.00**

Rost frei CE

Flat Steel Anchor

Use

- Threaded lifting anchor with flat steel for lifting concrete elements
- Load is introduced via additional tensile reinforcement laid over the flat steel
- Top-sided installation in the component
- To attach, screw a suitable lifting key into the threaded socket

Your advantages

- Lowest anchor heights for particularly thin and light panels
- Flexible due to tensile reinforcement added on site

Component recommendation

✓ Slab/panel ✓ Stairway/platform ✓ Shaft/shell segment

✓ Pipe/container ✓ Foundation ✓ Balcony ✓ L-shaped wall

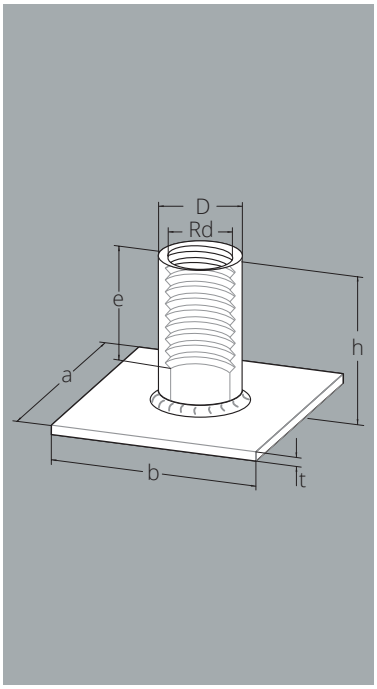

Flachstahlanchor – black steel

Ref. no.	Type	Colour coding-Guideline data clip (see page 43)	Thread size	Dimensions						Load carrier	Packing unit	Weight approx.	Price plus RTZ
				D [mm]	a [mm]	b [mm]	t [mm]	e [mm]	h [mm]	[pieces]	[pieces]	[kg/100 pcs]	[EUR/pcs]
116985	FSA-BK-12	Pastel orange	Rd 12	15.0	35	25	3	22	30	400	100	4.30	**3.30**
116996	FSA-BK-14	Pure white	Rd 14	18.0	35	35	3	25	33	100	100	6.60	**3.35**
117004	FSA-BK-16	Flame red	Rd 16	21.0	50	35	3	27	35	500	50	9.00	**4.30**
117017	FSA-BK-18	Light pink	Rd 18	24.0	60	45	5	34	44	100	25	18.50	**4.70**
117037	FSA-BK-20	Pastel green	Rd 20	27.2	60	60	5	35	47	500	25	25.50	**5.35**
117050	FSA-BK-24	Anthracite grey	Rd 24	31.0	80	60	5	43	54	500	20	33.70	**6.10**
117071	FSA-BK-30	Emerald green	Rd 30	39.5	100	80	6	56	72	500	1	68.80	**9.45**
117093	FSA-BK-36	Light blue	Rd 36	47.0	130	100	6	67	84	400	1	112.90	**14.70**
117101	FSA-BK-42	Silver grey	Rd 42	54.0	130	130	8	80	98	200	1	176.00	**22.80**
117108	FSA-BK-52	Sulphur yellow	Rd 52	67.2	150	130	8	97	117	100	1	266.00	**46.70**

CE

Flachstahlanchor – steel galvanized

Ref. no.	Type	Colour coding-Guideline data clip (see page 43)	Thread size	Dimensions						Load carrier	Packing unit	Weight approx.	Price plus RTZ
				D [mm]	a [mm]	b [mm]	t [mm]	e [mm]	h [mm]	[pieces]	[pieces]	[kg/100 pcs]	[EUR/pcs]
116990	FSA-ZN-12	Pastel orange	Rd 12	15.0	35	25	3	22	30	400	100	5.00	**4.55**
116999	FSA-ZN-14	Pure white	Rd 14	18.0	35	35	3	25	33	100	100	7.00	**4.60**
117011	FSA-ZN-16	Flame red	Rd 16	21.0	50	35	3	27	35	500	50	10.00	**5.15**
117028	FSA-ZN-18	Light pink	Rd 18	24.0	60	45	5	34	44	100	25	19.00	**5.95**
117045	FSA-ZN-20	Pastel green	Rd 20	27.2	60	60	5	35	47	500	25	26.00	**7.20**
117057	FSA-ZN-24	Anthracite grey	Rd 24	31.0	80	60	5	43	54	500	20	33.00	**7.70**
117080	FSA-ZN-30	Emerald green	Rd 30	39.5	100	80	6	56	72	500	1	70.00	**12.20**
117096	FSA-ZN-36	Light blue	Rd 36	47.0	130	100	6	67	84	400	1	113.00	**19.15**
117104	FSA-ZN-42	Silver grey	Rd 42	54.0	130	130	8	80	98	200	1	176.00	**29.40**
117111	FSA-ZN-52	Sulphur yellow	Rd 52	67.2	150	130	8	97	117	100	1	261.00	**54.00**

CE

Flat Steel Anchor – stainless steel socket

Ref. no.	Type	Colour coding-Guideline data clip (see page 43)	Thread size	Dimensions D [mm]	a [mm]	b [mm]	t [mm]	e [mm]	h [mm]	Load carrier [pieces]	Packing unit [pieces]	Weight approx. [kg/100 pcs]	Price plus RTZ [EUR/pcs]
278180	FSA-BV-12	Pastel orange	Rd 12	15.0	35	25	3	22	30	400	100	4.30	**7.60**
278181	FSA-BV-14	Pure white	Rd 14	18.0	35	35	3	25	33	100	100	6.60	**8.95**
278182	FSA-BV-16	Flame red	Rd 16	21.0	50	35	3	27	35	500	50	9.00	**10.55**
278183	FSA-BV-18	Light pink	Rd 18	24.0	60	45	5	34	44	100	25	18.50	**19.75**
278184	FSA-BV-20	Pastel green	Rd 20	27.2	60	60	5	35	47	500	25	25.50	**20.85**
278185	FSA-BV-24	Anthracite grey	Rd 24	31.0	80	60	5	43	54	500	20	33.70	**23.65**
278186	FSA-BV-30	Emerald green	Rd 30	39.5	100	80	6	56	72	500	1	68.80	**37.40**
278187	FSA-BV-36	Light blue	Rd 36	47.0	130	100	6	67	84	400	1	112.90	**52.50**
278188	FSA-BV-42	Silver grey	Rd 42	54.0	130	130	8	80	98	200	1	176.00	**72.50**
278189	FSA-BV-52	Sulphur yellow	Rd 52	67.2	150	130	8	97	117	100	1	266.00	**131.50**

Flat Steel Anchor – stainless steel

Ref. no.	Type	Colour coding-Guideline data clip (see page 43)	Thread size	Dimensions D [mm]	a [mm]	b [mm]	t [mm]	e [mm]	h [mm]	Load carrier [pieces]	Packing unit [pieces]	Weight approx. [kg/100 pcs]	Price plus RTZ [EUR/pcs]
116993	FSA-VA-12	Pastel orange	Rd 12	15.0	35	25	3	22	30	400	100	4.30	**8.50**
117001	FSA-VA-14	Pure white	Rd 14	18.0	35	35	3	25	33	100	100	6.60	**9.95**
117013	FSA-VA-16	Flame red	Rd 16	21.0	50	35	3	27	35	500	50	9.00	**11.70**
117032	FSA-VA-18	Light pink	Rd 18	24.0	60	45	5	34	44	100	25	18.50	**22.35**
117047	FSA-VA-20	Pastel green	Rd 20	27.2	60	60	5	35	47	500	25	25.50	**23.95**
117061	FSA-VA-24	Anthracite grey	Rd 24	31.0	80	60	5	43	54	500	20	33.70	**26.35**
117085	FSA-VA-30	Emerald green	Rd 30	39.5	100	80	6	56	72	500	1	68.80	**42.00**
117099	FSA-VA-36	Light blue	Rd 36	47.0	130	100	6	67	84	400	1	112.90	**58.50**
117107	FSA-VA-42	Silver grey	Rd 42	54.0	130	130	8	80	98	200	1	176.00	**80.90**
117113	FSA-VA-52	Sulphur yellow	Rd 52	67.2	150	130	8	97	117	100	1	266.00	**149.00**

SAS Flat Steel Anchor – galvanized steel – for manholes and pipes

Ref. no.	Type	Colour coding-Guideline data clip (see page 43)	System size	Thread size	Dimensions D [mm]	a [mm]	b [mm]	t [mm]	e [mm]	h [mm]	Load carrier [pieces]	Packing unit [pieces]	Weight approx. [kg/100 pcs]	Price plus RTZ [EUR/pcs]
245879	FSA-ZN-A	light blue	SAS A	Rd 14	18.0	60.0	60.0	5.0	25.0	60	1000	1	10.10	**4.75**
245880	FSA-ZN-B	beige	SAS B	Rd 16	21.0	60.0	60.0	5.0	27.0	70	500	1	24.00	**5.35**
245881	FSA-ZN-C	gray-white	SAS C	Rd 24	31.0	130.0	130.0	8.0	43.0	70	300	1	126.00	**8.50**
243437	FSA-ZN-D	purple	SAS D	Rd 30	39.5	100.0	80.0	6.0	56.0	120	200	1	92.00	**12.30**

Bolt Anchor

Use

- Threaded lifting anchor with bolt head for lifting concrete elements
- Top-sided installation in the component
- To attach, screw a suitable lifting key into the threaded socket.

Your advantages

- Short anchor lengths for low panel thicknesses
- Concentrated, deep load application through bolt head for low reinforcement effort

Component recommendation

✓ Slab/panel ✓ Stairway/platform ✓ Shaft/shell segment

✓ Pipe/container ✓ Foundation ✓ Balcony ✓ L-shaped wall

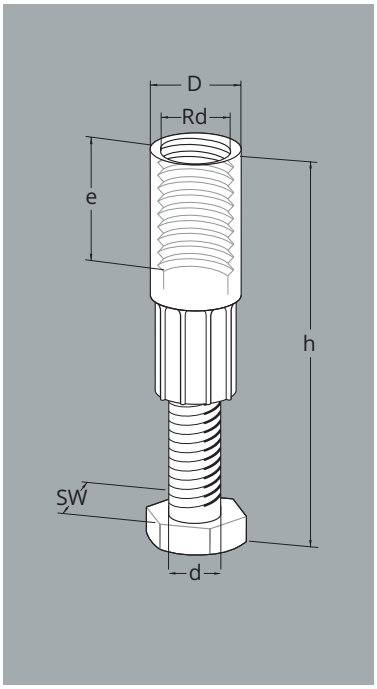

Bolt Anchor – galvanized steel socket

Ref. no.	Type	Colour coding-Guideline data clip (see page 43)	Thread size	Dimensions D [mm]	SW [mm]	d [mm]	e [mm]	h [mm]	Load carrier [pieces]	Packing unit [pieces]	Weight approx. [kg/100 pcs]	Price plus RTZ [EUR/pcs]
117406	SCA-ZN-12	Pastel orange	Rd 12	15.0	13	8	22	70	1000	100	4.00	**2.21**
117409	SCA-ZN-14	Pure white	Rd 14	18.0	17	10	25	70	–	50	6.00	**2.34**
117412	SCA-ZN-16	Flame red	Rd 16	21.0	19	12	27	83	1000	50	12.00	**2.55**
117418	SCA-ZN-18	Light pink	Rd 18	24.0	22	14	34	100	–	50	17.00	**3.65**
117423	SCA-ZN-20	Pastel green	Rd 20	27.2	24	16	35	130	500	25	30.00	**4.60**
117427	SCA-ZN-24	Anthracite grey	Rd 24	31.0	30	20	43	140	1000	25	44.00	**5.75**
140689	SCA-ZN-30	Emerald green	Rd 30	39.5	30	20	56	170	400	1	72.00	**10.00**

CE

Bolt Anchor – stainless steel socket

Ref. no.	Type	Colour coding-Guideline data clip (see page 43)	Thread size	Dimensions D [mm]	SW [mm]	d [mm]	e [mm]	h [mm]	Load carrier [pieces]	Packing unit [pieces]	Weight approx. [kg/100 pcs]	Price plus RTZ [EUR/pcs]
117408	SCA-VA-12	Pastel orange	Rd 12	15.0	13	8	22	70	1000	100	6.00	**7.20**
117411	SCA-VA-14	Pure white	Rd 14	18.0	17	10	25	70	–	50	6.00	**8.45**
117417	SCA-VA-16	Flame red	Rd 16	21.0	19	12	27	83	1000	50	13.00	**10.90**
117422	SCA-VA-18	Light pink	Rd 18	24.0	22	14	34	100	–	50	17.00	**17.70**
117426	SCA-VA-20	Pastel green	Rd 20	27.2	24	16	35	130	500	25	30.00	**20.95**
117430	SCA-VA-24	Anthracite grey	Rd 24	31.0	30	20	43	140	1000	25	42.00	**24.25**
142511	SCA-VA-30	Emerald green	Rd 30	39.5	30	20	56	170	400	1	73.00	**36.70**

Rost frei CE

SAS Bolt Anchor – galvanized steel socket – for manholes and pipes

Ref. no.	Type	Colour coding-Guideline data clip (see page 43)	System size	Thread size	Dimensions D [mm]	SW [mm]	d [mm]	e [mm]	h [mm]	Load carrier [pieces]	Packing unit [pieces]	Weight approx. [kg/100 pcs]	Price plus RTZ [EUR/pcs]
250232	SCA-ZN-V	traffic green	SAS V	Rd 12	15.0	8.0	13.0	22.0	75	1000	200	4.73	**2.08**
241979	SCA-ZN-A	light blue	SAS A	Rd 14	18.0	10.0	17.0	25.0	75	1000	100	7.90	**2.41**
241980	SCA-ZN-B	beige	SAS B	Rd 16	21.0	12.0	19.0	27.0	95	1000	100	12.00	**3.30**
241981	SCA-ZN-C	gray-white	SAS C	Rd 24	31.0	20.0	30.0	43.0	110	400	25	44.00	**5.35**

CE

Lifting Loop

Use

- Flexible attachment point for lifting concrete elements
- Also available with M-thread – for attaching/lifting machines
- Can be used for centric pull or parallel shear pull up to 45°
- Screw the lifting key into a lifting anchor embedded in concrete or the attachment point provided on a machine – attach the component to the lifting key

Your advantages

- Cost-efficient lifting key for load angles between 0–45°
- Easy assignment of size by colour coding
- Robust thread for durability
- Officially certified fatigue, alternating bending and tensile tests

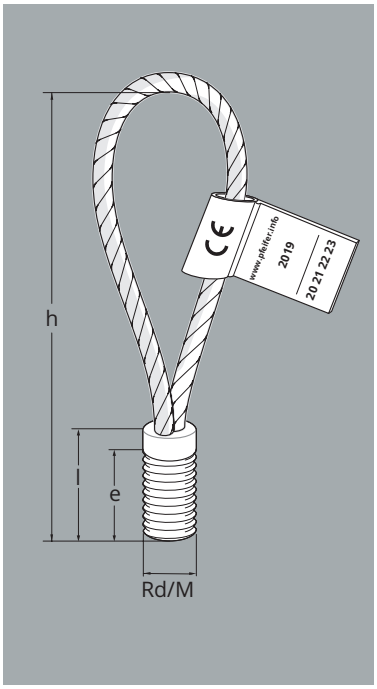

Lifting Loop – steel rope – for lifting concrete elements

Ref. no.	Type	Colour coding Load capacity identification tag	Thread size	Dimensions e [mm]	Dimensions h [mm]	Dimensions l [mm]	Packing unit [pieces]	Weight approx. [kg/100 pcs]	Price plus RTZ [EUR/pcs]
117917	SOE-12	Pastel orange	Rd 12	20	155	28	25	5.50	**10.90**
117918	SOE-14	Pure white	Rd 14	22	155	32	25	8.00	**11.15**
117919	SOE-16	Flame red	Rd 16	25	155	36	25	11.50	**15.20**
117922	SOE-18	Light pink	Rd 18	29	190	40	25	16.60	**18.00**
117924	SOE-20	Pastel green	Rd 20	33	215	45	25	24.00	**21.15**
117927	SOE-24	Anthracite grey	Rd 24	40	255	54	25	39.00	**24.50**
117933	SOE-30	Emerald green	Rd 30	56	300	68	10	73.00	**38.20**
117937	SOE-36	Light blue	Rd 36	67	340	81	10	128.00	**73.60**
117939	SOE-42	Silver grey	Rd 42	80	425	95	10	214.00	**93.10**
283116	SOE-52	Sulphur yellow	Rd 52	97	480	117	10	362.00	**153.00**

CE

Lifting Loop – steel rope – for lifting machines and steel components

Ref. no.	Type	Colour coding Load capacity identification tag	Thread size	Dimensions e [mm]	Dimensions h [mm]	Dimensions l [mm]	Packing unit [pieces]	Weight approx. [kg/100 pcs]	Price plus RTZ [EUR/pcs]
245152	SOM-12	Pastel orange	M 12	20	155	28	25	5.50	**12.50**
245154	SOM-14	Pure white	M 14	22	155	32	25	8.00	**12.85**
245155	SOM-16	Flame red	M 16	25	155	36	25	11.50	**17.45**
245157	SOM-18	Light pink	M 18	29	190	40	25	16.60	**20.70**
245159	SOM-20	Pastel green	M 20	33	215	45	25	24.00	**24.30**
245161	SOM-24	Anthracite grey	M 24	40	255	54	25	39.00	**28.20**
245162	SOM-30	Emerald green	M 30	56	300	68	10	73.00	**43.90**
245163	SOM-36	Light blue	M 36	67	340	81	10	128.00	**84.60**
245164	SOM-42	Silver grey	M 42	80	425	95	10	214.00	**107.00**
245165	SOM-52	Sulphur yellow	M 52	97	480	117	10	362.00	**176.00**

CE

Flared Lifting Loop

Use

- Flexible attachment point for lifting concrete elements
- Also available with M-thread – for attaching/lifting machines
- Can be used for centric pull, parallel and transverse shear pull
- Screw the lifting key into a lifting anchor embedded in concrete or the attachment point provided on a machine – attach the component to the lifting key

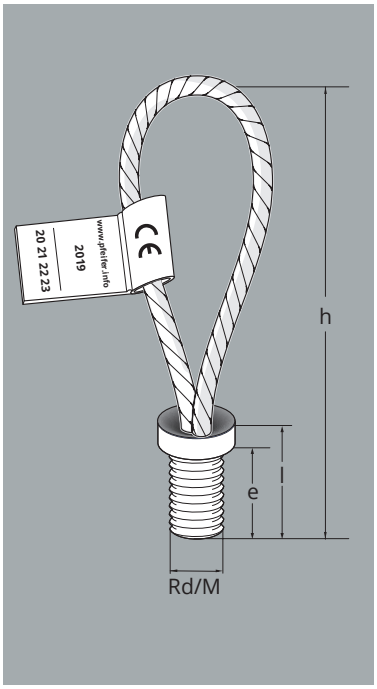

Your advantages

- Cost-efficient lifting key for load angles between 0–90°
- Easy assignment of size by colour coding
- Robust thread for durability
- Officially certified fatigue, alternating bending and tensile tests

Flared Lifting Loop – steel rope – for lifting concrete elements

Ref. no.	Type	Colour coding Load capacity identification tag	Thread size	Dimensions				Packing unit	Weight approx.	Price plus RTZ
				D [mm]	e [mm]	h [mm]	l [mm]	[pieces]	[kg/100 pcs]	[EUR/pcs]
263582	TSO-12	Pastel orange	Rd 12	19	21	155	31.5	25	7.90	**16.80**
257284	TSO-16	Flame red	Rd 16	26	24	158	38	25	12.00	**22.85**
257285	TSO-20	Pastel green	Rd 20	29	33	219	49	25	24.00	**31.80**
258914	TSO-24	Anthracite grey	Rd 24	34	39	255	57	10	45.00	**44.40**
257286	TSO-30	Emerald green	Rd 30	40	53	305	73	10	73.00	**56.80**
262008	TSO-36	Light blue	Rd 36	52	63	340	91	10	142.00	**108.00**

CE

Flared Lifting Loop – steel rope – for lifting machines and steel components

Ref. no.	Type	Colour coding Load capacity identification tag	Thread size	Dimensions				Packing unit	Weight approx.	Price plus RTZ
				D [mm]	e [mm]	h [mm]	l [mm]	[pieces]	[kg/100 pcs]	[EUR/pcs]
270111	TSM-12	Pastel orange	M 12	19	21	155	31.5	25	7.90	**19.25**
270112	TSM-16	Flame red	M 16	26	24	158	38	25	12.00	**26.35**
270113	TSM-20	Pastel green	M 20	29	33	219	49	25	24.00	**36.50**
270114	TSM-24	Anthracite grey	M 24	34	39	255	57	10	45.00	**51.00**
270115	TSM-30	Emerald green	M 30	40	53	305	73	10	73.00	**64.90**
270116	TSM-36	Light blue	M 36	52	63	340	91	10	142.00	**124.50**

CE

Lifting Loop, tapered

Use

- Flexible attachment point for lifting concrete elements
- For use in special cases, such as in recessed areas with very recessed lifting anchors
- Can be used for centric pull or parallel shear pull up to 45°, no deflection permitted over edges of component
- Screw the lifting key into a lifting anchor embedded in concrete – attach the component to the lifting key

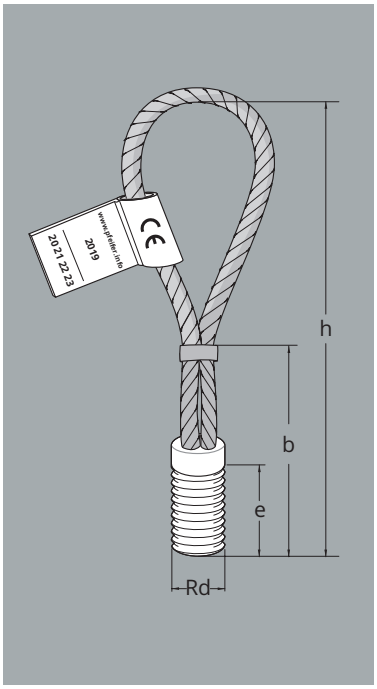

Your advantages

- Special lifting key for use in deep recesses
- Easy assignment of size by colour coding
- Officially certified fatigue, alternating bending and tensile tests

Lifting Loop waisted – steel rope – for feed-throughs

Ref. no.	Type	Colour coding Load capacity identification tag	Thread size	Dimensions e [mm]	Dimensions h [mm]	Dimensions b [mm]	Packing unit [pieces]	Weight approx. [kg/100 pcs]	Price plus RTZ [EUR/pcs]
117930	**SOT-24**	Anthracite grey	Rd 24	40	450	200	10	59.80	**55.00**
214112	**SOT-30**	Emerald green	Rd 30	56	500	200	10	102.00	**70.40**
214113	**SOT-36**	Light blue	Rd 36	67	500	200	10	152.00	**86.50**
214117	**SOT-42**	Silver grey	Rd 42	80	550	200	10	250.00	**147.50**
214121	**SOT-52**	Sulphur yellow	Rd 52	97	650	250	10	430.00	**186.00**

CE

new

Flared lifting loop, tapered

Use

- Flexible attachment point for the lifting of concrete elements
- Application in special cases, for example in recess areas with highly recessed lifting anchors
- Usable for straight pull, parallel shear pull and transverse shear pull; deflection over component edges not permitted
- Screw the lifting key into a lifting anchor embedded in concrete – attach the component to the lifting key

Your advantages

- Special lifting key for use in deep recesses
- Inexpensive lifting key for load angles between 0–90°
- Easy assignment of size by colour coding
- Fatigue, alternating bending and tensile tests by official testing body

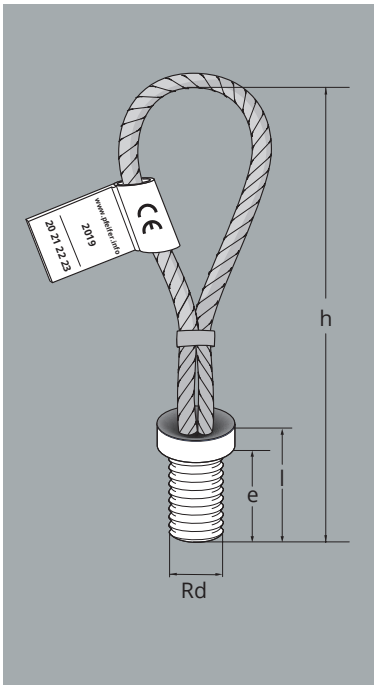

Flared lifting loop, tapered – steel rope – for feed-throughs

Ref. no.	Type	Colour coding Load capacity identification tag	Thread size	Dimensions e [mm]	h [mm]	l [mm]	b [mm]	Packing unit [pieces]	Weight approx. [kg/100 pcs]	Price plus RTZ [EUR/pcs]
475390	TST-12	Pastel orange	Rd 12	21	280	31.5	156	25	12.00	**34.90**
475391	TST-16	Flame red	Rd 16	24	285	38	165	25	17.00	**47.50**

CE

HL Lifting Loop

Use

- Flexible attachment point for lifting concrete shell segments
- Can be used for centric pull or parallel shear pull up to 15°
- Screw the lifting key into HL Lifting Anchor embedded in concrete (see pages 22 and 27) – attach the component to the lifting key
- Notice: Depending on the selected lifting key, different maximum load-bearing capacities for use in shell segments (e.g. SHL-42/125 max $N_{R,adm}$ = 125 kN)

Your advantages

- Inexpensive lifting key for load angles between 0–15°
- Easy assignment of size by colour coding
- Robust thread for durability
- Officially certified fatigue, alternating bending and tensile tests

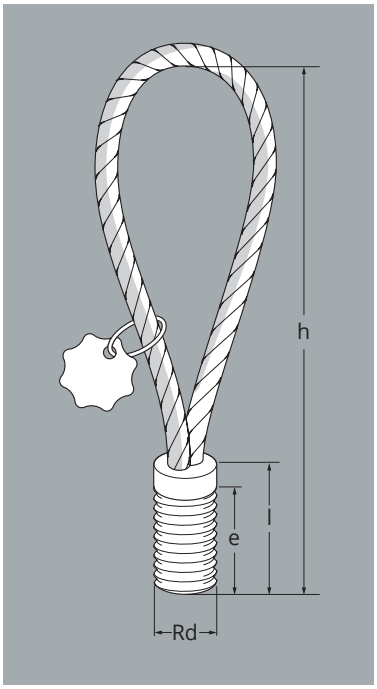

HL Lifting Loop – steel rope – for shell segments

Ref. no.	Type	Colour coding Load capacity identification tag	Thread size	Dimensions h [mm]	Dimensions e [mm]	Dimensions l [mm]	Packing unit [pieces]	Weight approx. [kg/pcs]	Price plus RTZ [EUR/pcs]
117939	**SOE-42/80**	grau	Rd 42	425	80	95	1	2.10	**93.10**
306401	**SHL-42/125**	white	Rd 42	480	80	100	1	2.80	**on request**
283116	**SHL-52/80**	yellow	Rd 52	480	97	117	1	3.60	**on request**
279219	**SHL-52/200**	green	Rd 52	670	97	134	1	6.20	**on request**

CE

Swivel Eye

Use

- Robust attachment point for lifting concrete elements
- Can be used for centric pull, parallel and transverse shear pull
- Screw the lifting key into a lifting anchor embedded in concrete – attach the component to the lifting key

Your advantages

- Can rotate freely without risk of unscrewing and er load
- Pressure plate enables gentle load application into the component
- Easy assignment of size by colour coding
- Robust components for durability

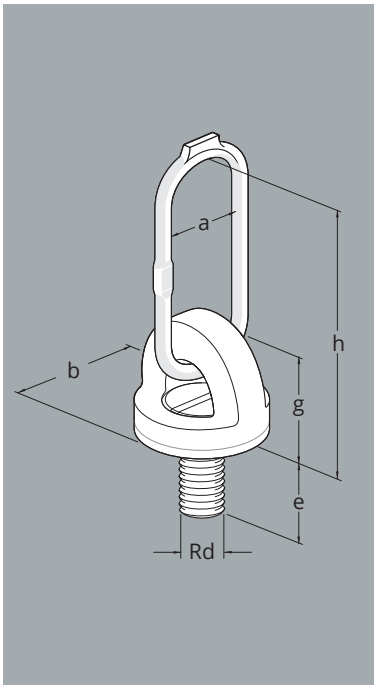

Swivel Eye – painted steel

Ref. no.	Type	Colour coding	Thread size	Dimensions					Packing unit	Weight approx.	Price plus RTZ
				a [mm]	b [mm]	e [mm]	g [mm]	h [mm]	[pieces]	[kg/pcs]	[EUR/pcs]
117948	**DA-12**	Pastel orange	Rd 12	50	47	16	48	115	1	0.45	**107.50**
117958	**DA-14**	Pure white	Rd 14	50	52	18	50	114	1	0.50	**111.50**
117967	**DA-16**	Flame red	Rd 16	60	56	21	60	152	1	0.85	**123.50**
117975	**DA-18**	Light pink	Rd 18	60	59	23	62	150	1	0.90	**145.50**
117982	**DA-20**	Pastel green	Rd 20	60	69	26	74	160	1	1.55	**169.00**
117991	**DA-24**	Anthracite grey	Rd 24	75	74	31	78	185	1	2.00	**186.00**
118000	**DA-30**	Emerald green	Rd 30	90	89	39	90	220	1	3.60	**258.00**
118009	**DA-36**	Light blue	Rd 36	100	101	47	107	255	1	5.50	**315.00**
118016	**DA-42**	Silver grey	Rd 42	100	109	55	112	255	1	6.20	**348.00**
118022	**DA-52**	Sulphur yellow	Rd 52	140	129	68	131	345	1	13.00	**528.00**
135526	**DA-56**	Pastel orange	Rd 56	140	200	70	165	370	1	22.00	**646.00**
135527	**DA-60**	Flame red	Rd 60	180	250	75	190	470	1	39.00	**968.00**

CE

Special Lifting Loop

Use

- Flexible attachment point for lifting concrete elements
- Can be used for centric pull, parallel and transverse shear pull
- Screw the lifting key into a lifting anchor embedded in concrete – attach the component to the lifting key

Your advantages

- Durable wire rope lifting key, due to gently angled wire rope loop
- Available for all PFEIFER lifting anchor sizes
- Easy assignment of size by colour coding
- Pressure plate enables gentle load application into the component

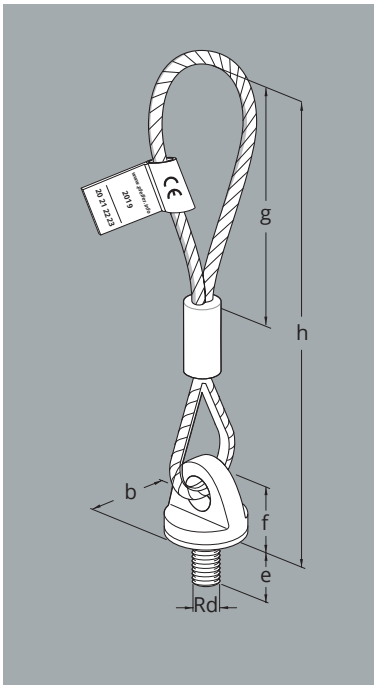

Special Lifting Loop – steel rope

Ref. no.	Type	Colour coding Load capacity identification tag	Thread size	Dimensions					Packing unit	Weight approx.	Price plus RTZ
				b [mm]	e [mm]	f [mm]	g [mm]	h [mm]	[pieces]	[kg/pcs]	[EUR/pcs]
118046	**SPE-12**	Pastel orange	Rd 12	45	16	40	160	310	1	0.26	**56.60**
118059	**SPE-14**	Pure white	Rd 14	51	18	42	180	340	1	0.34	**66.60**
118067	**SPE-16**	Flame red	Rd 16	55	21	48	180	345	1	0.48	**78.60**
118072	**SPE-18**	Light pink	Rd 18	58	23	50	200	385	1	0.66	**83.60**
118082	**SPE-20**	Pastel green	Rd 20	67	26	60	220	410	1	0.95	**94.30**
118090	**SPE-24**	Anthracite grey	Rd 24	73	31	62	240	435	1	1.55	**111.00**
118104	**SPE-30**	Emerald green	Rd 30	88	39	75	240	490	1	2.54	**133.00**
118119	**SPE-36**	Light blue	Rd 36	100	47	92	260	570	1	3.94	**191.50**
118127	**SPE-42**	Silver grey	Rd 42	100	55	97	350	650	1	6.56	**258.50**
118134	**SPE-52**	Sulphur yellow	Rd 52	120	68	113	380	760	1	9.00	**416.00**
149264	**SPE-56**	Pastel orange	Rd 56	140	70	145	520	1150	1	20.00	**500.00**
149269	**SPE-60**	Flame red	Rd 60	140	75	145	700	1250	1	27.00	**557.00**

CE

SAS Lifting Loop

Use

- Flexible attachment point for lifting and moving concrete pipe and manhole elements
- Screw the lifting key into a lifting anchor embedded in concrete – attach the component to the lifting key

Your advantages

- Screwed to the concrete element, rotatable
- Firmly secured attachment bolt[1)]
- Easy assignment of size by colour coding

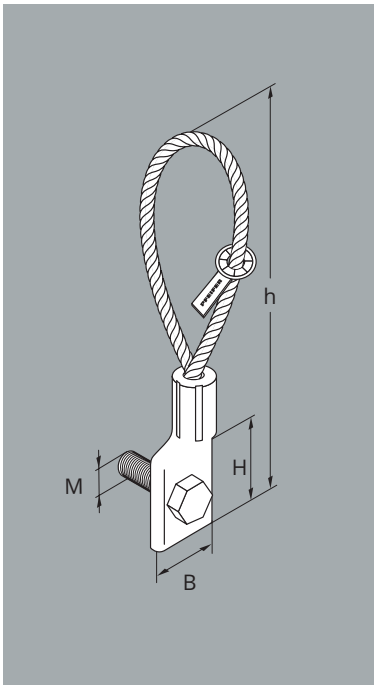

SAS Lifting Loop – steel rope – for manholes and pipes

Ref. no.	Type	Colour coding Load capacity identification tag	System size	Thread size	Dimensions			Thread length	Load carrier	Packing unit	Weight approx.	Price plus RTZ
					H [mm]	B [mm]	h [mm]	[mm]	[pieces]	[pieces]	[kg/100 pcs]	[EUR/pcs]
250234	**AS-V**	traffic green	SAS V	M 12	30	24.5	180	21.0	1000	1	15.00	**6.55**
243751	**AS-A**	light blue	SAS A	M 14	40	29.5	210	23.5	1000	1	18.50	**6.65**
243752	**AS-B**	beige	SAS B	M 16	55	37.5	280	26.5	1000	1	50.00	**9.55**
243753	**AS-C**	gray-white	SAS C	M 24	65	55.2	330	39.0	400	1	133.00	**13.55**
243754	**AS-D**	purple	SAS D	M 30	80	65.5	390	52.0	400	1	235.00	**24.05**

Supplied with Connect bolt 8.8

CE

Super Lifter

Use

- Robust attachment point for lifting very thin concrete elements
- Can be used for centric pull, parallel and transverse shear pull
- Screw the lifting key into a Super Anchor embedded in concrete – attach the component to the lifting key

Your advantages

- Short thread for fast screwing/unscrewing
- Relatively low dead weight at comparable load level
- Pressure plate enables gentle load application into the component
- Robust components for durability

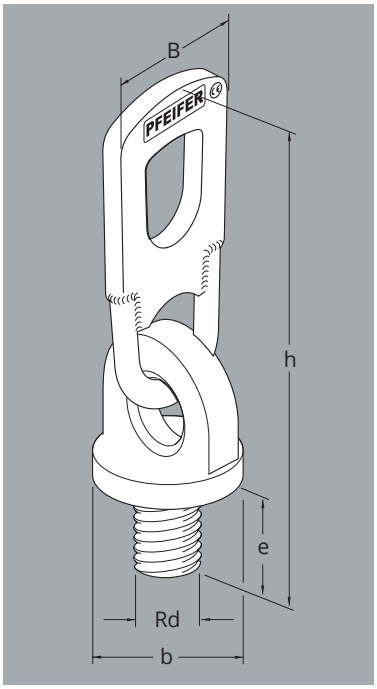

Super Lifter – painted steel

Ref. no.	Type	System size	Thread size	Dimensions				Packing unit	Weight approx.	Price plus RTZ
				B [mm]	b [mm]	e [mm]	h [mm]	[pieces]	[kg/pcs]	[EUR/pcs]
187758	**SAH-55**	Z 55	Rd 22	118	80	35	300	2	3.60	**277.50**
187760	**SAH-110**	Z 110	Rd 32	160	110	50	440	2	10.10	**462.00**
187761	**SAH-220**	Z 220	Rd 48	198	120	60	545	2	19.90	**721.00**

CE

HL Lifting Key

Use

- Robust attachment point for lifting concrete shell segments
- Can be used for centric pull or parallel shear pull up to 15°
- Screw the lifting key into HL Lifting Anchor embedded in concrete (see pages 22 and 27) – attach the component to the lifting key

Your advantages

- Pressure plate enables gentle load application into the component
- Easy assignment of size by colour coding
- Robust components for durability

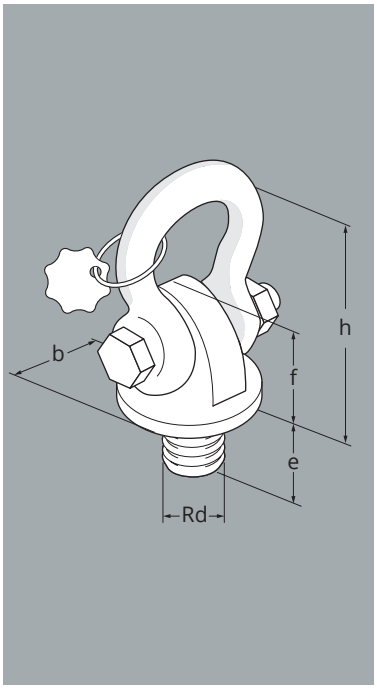

HL Lifting Key – painted steel – for shell segments

Ref. no.	Type	Colour coding Guideline Load capacity identification tag	Thread size	Dimensions b [mm]	e [mm]	h [mm]	f [mm]	Packing unit [pieces]	Weight approx. [kg/pcs]	Price plus RTZ [EUR/pcs]
310584	**AHL-42/125**	white	Rd 42	120	70	275	145	1	15.5	**on request**
249643	**AHL-52/200**	green	Rd 52	120	70	275	145	1	15.9	**on request**

CE

Data Clips

Use

- Clear marking of PFEIFER threaded anchors, even when embedded in concrete
- Simply plug Data Clip to the corresponding threaded anchor.

Your advantages

- Easy assignment of the anchor size to suitable lifting keys and accessories through colour coding
- Fixing of additional lateral reinforcement possible
- Labelling for required diameter of additional reinforcement
- Identification of the lifting anchor even in the installed state
- Manufacturer, Typee and size visible, even when cast in concrete

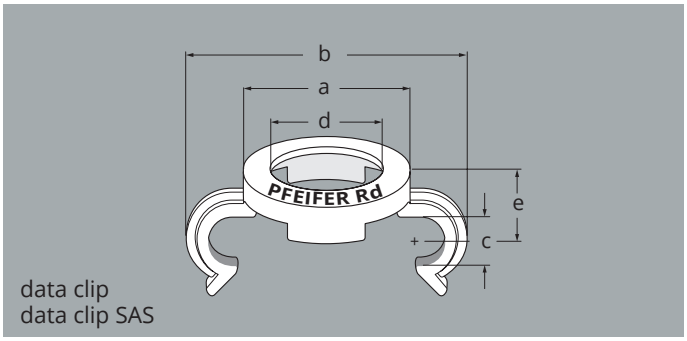

data clip
data clip SAS

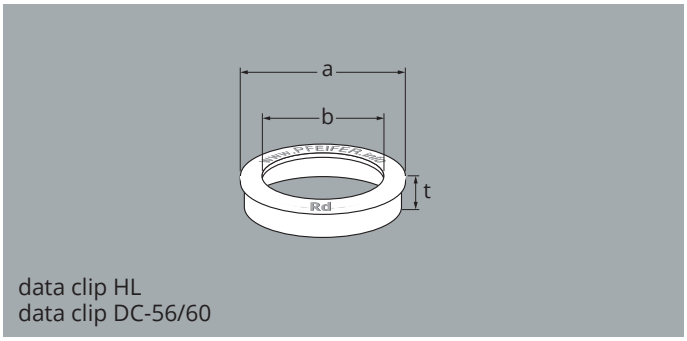

data clip HL
data clip DC-56/60

Data Clip – plastic

Ref. no.	Type	Colour coding	For anchor size	Dimensions					Packing unit	Weight approx.	Price plus RTZ
				a [mm]	b [mm]	c [mm]	d [mm]	e [mm]	[pieces]	[kg/100 pcs]	[EUR/100 pcs]
118673	DC-12	Pastel orange	Rd 12	18.5	35	6.5	12.5	10.0	100	0.12	**17.10**
118674	DC-14	Pure white	Rd 14	21.5	38	6.5	14.5	11.0	100	0.15	**17.30**
118675	DC-16	Flame red	Rd 16	25.5	46	8.5	17.0	12.0	100	0.18	**18.30**
118676	DC-18	Light pink	Rd 18	28.5	49	8.5	19.0	14.5	100	0.31	**19.70**
118677	DC-20	Pastel green	Rd 20	31.5	52	8.5	21.0	14.5	100	0.33	**20.60**
118678	DC-24	Anthracite grey	Rd 24	35.0	60	11.0	25.5	15.5	100	0.36	**33.10**
118679	DC-30	Emerald green	Rd 30	44.0	73	13.0	31.5	16.5	100	0.87	**38.30**
118680	DC-36	Light blue	Rd 36	52.5	86	15.0	37.5	22.5	100	1.20	**50.60**
118681	DC-42	Silver grey	Rd 42	59.5	97	17.0	44.0	23.5	100	1.35	**73.60**
118683	DC-52	Sulphur yellow	Rd 52	73.0	119	22.0	54.0	31.0	100	2.25	**132.00**
258175	DC-56	Pastel orange	Rd 56	81.0	–	–	59.0	–	100	1.60	**143.50**
258176	DC-60	Flame red	Rd 60	86.0	–	–	64.0	–	100	1.70	**154.50**

SAS Data Clip – plastic – for lifting anchors for manhole transport

Ref. no.	Type	Colour coding	System size	Dimensions					Packing unit	Weight approx.	Price plus RTZ
				a [mm]	b [mm]	c [mm]	d [mm]	e [mm]	[pieces]	[kg/100 pcs]	[EUR/100 pcs]
250108	DC-V	traffic green	SAS V	18.5	35.0	6.5	12.5	10.0	100	0.12	**17.10**
243690	DC-A	light blue	SAS A	21.5	38.0	6.5	14.5	11.0	100	0.15	**17.30**
243691	DC-B	beige	SAS B	25.5	46.0	8.5	17.0	12.0	100	0.18	**18.30**
243665	DC-C	gray-white	SAS C	35.0	60.0	11.0	25.5	15.5	100	0.36	**33.10**
243657	DC-D	purple	SAS D	44.0	73.0	13.0	31.5	16.5	100	0.87	**38.30**

HL Data Clip – plastic – for lifting anchors for shell segment transport

Ref. no.	Type	Colour coding	For anchor size	Dimensions			Packing unit	Weight approx.	Price plus RTZ
				a [mm]	b [mm]	t [mm]	[pieces]	[kg/100 pcs]	[EUR/pcs]
314022	**DHL-42**	white	Rd 42	61	44	14	100	0.50	**on request**
305263	**DHL-52**	green	Rd 52	74	54	15	100	0.90	**on request**

Nail Disc for threaded anchor system

Use

- Simple formwork fixing of threaded anchors
- Screw the nail disc into the anchor and nail, screw or glue it to the formwork
- Nail Disc for swivel eyes available – for a sufficiently large recess in the concrete so that the pressure plate of the lifting keys can lie flat

Your advantages

- Short thread pitches save assembly time
- Especially robust and dimensionally stable polyethylene plastic
- Predrilled nail holes facilitate nail placement
- Two countersunk nail holes for a particularly smooth recess surface
- Easy assignment of size by colour coding
- Different, coordinated closure solutions available

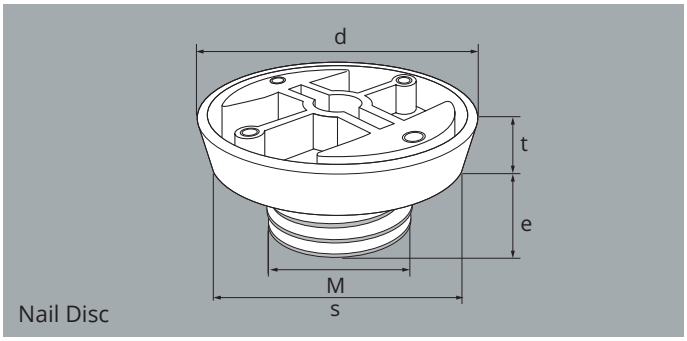

Nail Disc

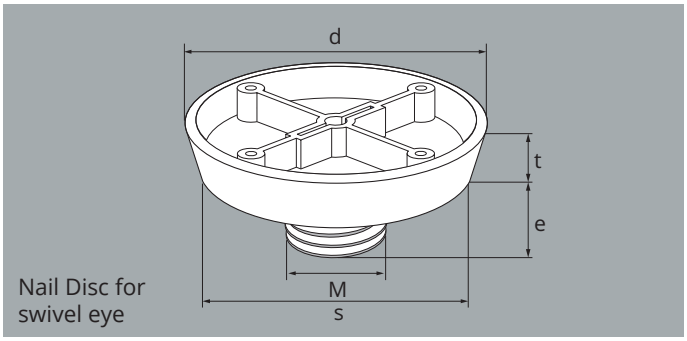

Nail Disc for swivel eye

Nail Disc – plastic

Ref. no.	Type	Colour coding	For thread	Thread size	Dimensions				Packing unit	Weight approx.	Price plus RTZ
					d [mm]	s [mm]	t [mm]	e [mm]	[pieces]	[kg/100 pcs]	[EUR/100 pcs]
391647	NT-12	Pastel orange	Rd/M 12	M 12	59.0	55.5	10	10	200	0.51	**32.20**
391648	NT-14	Pure white	Rd/M 14	M 14	59.0	55.5	10	10	200	0.55	**35.50**
391649	NT-16	Flame red	Rd/M 16	M 16	59.0	55.5	10	10	200	0.59	**36.20**
391650	NT-18	Light pink	Rd/M 18	M 18	59.0	55.5	10	10	200	1.07	**36.50**
391651	NT-20	Pastel green	Rd/M 20	M 20	59.0	55.5	10	10	200	1.15	**36.70**
391652	NT-24	Anthracite grey	Rd/M 24	M 24	59.0	55.5	10	10	200	1.30	**38.00**
391653	NT-30	Emerald green	Rd/M 30	M 30	59.0	55.5	10	10	150	1.97	**45.20**
391654	NT-36	Light blue	Rd/M 36	M 36	59.0	55.5	10	15	100	2.34	**54.10**
391655	NT-42	Silver grey	Rd/M 42	M 42	67.5	63.0	13	20	50	5.17	**104.00**
391656	NT-52	Sulphur yellow	Rd/M 52	M 52	81.0	76.0	13	20	50	6.50	**125.00**

Nail Disc for swivel eye – plastic

Ref. no.	Type	Colour coding	For thread	Thread size	Dimensions				Packing unit	Weight approx.	Price plus RTZ
					d [mm]	s [mm]	t [mm]	e [mm]	[pieces]	[kg/100 pcs]	[EUR/100 pcs]
391657	NT-DRA-36	Light blue	Rd/M 36	M 36	105.5	101	12	15	25	5.69	**210.50**
391658	NT-DRA-42	Silver grey	Rd/M 42	M 42	115.5	110	15	20	25	7.66	**227.50**
391659	NT-DRA-52	Sulphur yellow	Rd/M 52	M 52	135.5	130	15	20	25	8.89	**241.50**

Fixing Bolts for threaded anchor system

Use

- Simple formwork fixing of threaded anchors
- Insert the Fixing Bolt into the anchor and screw them together through the formwork using the fixing screw (available separately)
- Different concrete covers are possible for flush or recessed installation of the anchors
- Fixing Bolt middle and Fixing Bolt for Super Anchor can be combined with recess discs – for a larger/matching diameter of the recess for the pressure plate of lifting keys

Your advantages

- Reusable
- Small recess diameter
- Different installation levels of the anchors – flush, shallow, middle, deep
- Different, coordinated closure solutions available

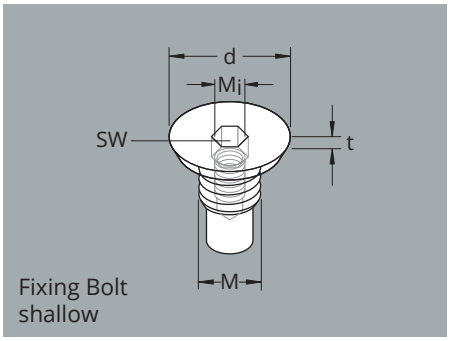

Fixing Bolt shallow

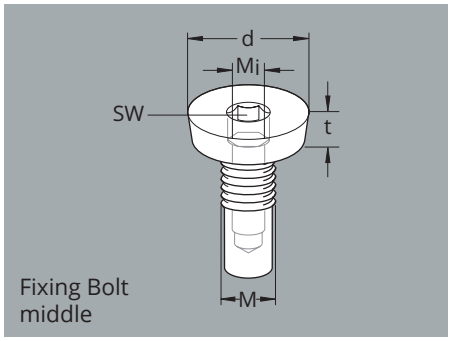

Fixing Bolt middle

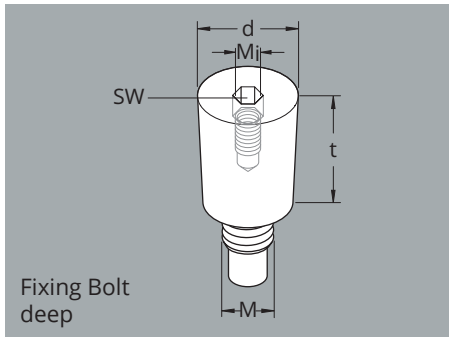

Fixing Bolt deep

Fixing Bolt shallow – galvanized steel

Ref. no.	Type	For thread	Thread size	Dimensions				Packing unit	Weight approx.	Price plus RTZ
				d [mm]	t [mm]	SW [mm]	M_i [mm]	[pieces]	[kg/100 pcs]	[EUR/pcs]
227962	BSF-ZN-12	Rd/M 12	M 12	23.0	3.0	6	M6	20	2.00	**6.80**
227964	BSF-ZN-14	Rd/M 14	M 14	26.0	3.0	8	M8	20	3.00	**8.40**
227965	BSF-ZN-16	Rd/M 16	M 16	30.0	3.5	10	M8	20	4.00	**9.55**
227966	BSF-ZN-18	Rd/M 18	M 18	33.0	3.5	10	M8	20	6.00	**10.40**
227967	BSF-ZN-20	Rd/M 20	M 20	37.0	4.0	10	M8	20	9.00	**11.45**
227968	BSF-ZN-24	Rd/M 24	M 24	40.0	4.0	14	M10	20	13.00	**12.80**
227969	BSF-ZN-30	Rd/M 30	M 30	48.5	4.5	14	M10	10	27.00	**20.75**
227970	BSF-ZN-36	Rd/M 36	M 36	58.0	4.5	14	M10	10	48.00	**26.60**
227971	BSF-ZN-42	Rd/M 42	M 42	66.5	5.0	17	M16	10	74.00	**42.90**
227972	BSF-ZN-52	Rd/M 52	M 52	79.5	5.0	17	M16	6	141.00	**57.10**

Fixing Bolt middle – galvanized steel

Ref. no.	Type	For thread	Thread size	Dimensions				Packing unit	Weight approx.	Price plus RTZ
				d [mm]	t [mm]	SW [mm]	M_i [mm]	[pieces]	[kg/100 pcs]	[EUR/pcs]
118583	BSM-ZN-12	Rd/M 12	M 12	23.5	8.5	6	M6	20	3.00	**8.00**
118584	BSM-ZN-14	Rd/M 14	M 14	26.5	8.5	8	M8	20	5.00	**9.25**
118585	BSM-ZN-16	Rd/M 16	M 16	30.5	8.5	10	M8	20	6.00	**10.45**
118586	BSM-ZN-18	Rd/M 18	M 18	33.0	8.5	10	M8	20	9.00	**11.45**
118587	BSM-ZN-20	Rd/M 20	M 20	37.0	8.5	10	M8	20	11.00	**13.55**
118588	BSM-ZN-24	Rd/M 24	M 24	40.5	10.0	14	M10	20	17.00	**16.45**
118589	BSM-ZN-30	Rd/M 30	M 30	49.0	10.0	14	M10	10	31.00	**25.65**
118590	BSM-ZN-36	Rd/M 36	M 36	59.0	10.0	14	M10	10	55.00	**31.90**
118591	BSM-ZN-42	Rd/M 42	M 42	67.0	13.0	17	M16	10	84.00	**57.90**
118592	BSM-ZN-52	Rd/M 52	M 52	80,0	13,0	17	M16	6	161,00	**74,20**

Fixing Bolt deep – galvanized steel

Ref. no.	Type	For thread	Thread size	Dimensions				Packing unit	Weight approx.	Price plus RTZ
				d [mm]	t [mm]	SW [mm]	M_i [mm]	[pieces]	[kg/100 pcs]	[EUR/pcs]
227977	BST-ZN-12	Rd/M 12	M 12	23.5	30.0	6	M6	20	10.00	**8.45**
227978	BST-ZN-14	Rd/M 14	M 14	26.5	30.0	8	M8	20	13.00	**9.90**
227979	BST-ZN-16	Rd/M 16	M 16	30.5	30.0	10	M8	20	18.00	**10.80**
227980	BST-ZN-18	Rd/M 18	M 18	33.5	30.0	10	M8	20	23.00	**11.75**
227981	BST-ZN-20	Rd/M 20	M 20	37.5	30.0	10	M8	20	29.00	**14.25**
227982	BST-ZN-24	Rd/M 24	M 24	41.0	30.0	14	M10	20	38.00	**18.55**
227983	BST-ZN-30	Rd/M 30	M 30	49.5	30.0	14	M10	6	62.00	**27.15**
227984	BST-ZN-36	Rd/M 36	M 36	59.0	30.0	14	M10	6	99.00	**35.80**
227985	BST-ZN-42	Rd/M 42	M 42	67.5	30.0	17	M16	6	140.00	**59.20**
227986	BST-ZN-52	Rd/M 52	M 52	80.5	30.0	17	M16	4	233.00	**78.80**

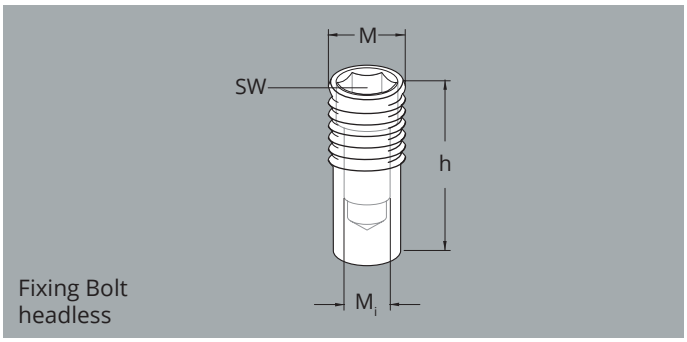

Fixing Bolt headless

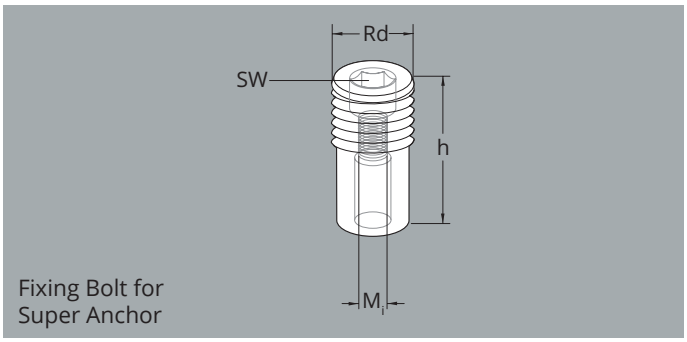

Fixing Bolt for Super Anchor

Fixing Bolt headless – galvanized steel

Ref. no.	Type	For thread	Thread size	Dimensions			Packing unit	Weight approx.	Price plus RTZ
				h [mm]	SW [mm]	M_i [mm]	[pieces]	[kg/100 pcs]	[EUR/pcs]
118593	BSO-ZN-12	Rd/M 12	M 12	20.0	6	M 6	20	0.80	**7.15**
118594	BSO-ZN-14	Rd/M 14	M 14	23.5	8	M 8	20	1.00	**8.40**
118595	BSO-ZN-16	Rd/M 16	M 16	26.0	10	M 8	20	2.00	**9.75**
118596	BSO-ZN-18	Rd/M 18	M 18	32.0	10	M 8	20	3.00	**10.00**
118597	BSO-ZN-20	Rd/M 20	M 20	32.5	10	M 8	20	4.00	**10.55**
118598	BSO-ZN-24	Rd/M 24	M 24	40.5	14	M 10	20	7.00	**11.45**
118599	BSO-ZN-30	Rd/M 30	M 30	56.0	14	M 10	10	15.00	**17.20**
118600	BSO-ZN-36	Rd/M 36	M 36	67.0	14	M 10	10	32.00	**22.80**
118601	BSO-ZN-42	Rd/M 42	M 42	80.0	17	M 16	10	47.00	**36.60**
118602	BSO-ZN-52	Rd/M 52	M 52	103.0	17	M 16	6	106.00	**50.40**
138084	BSO-ZN-56	Rd/M 56	M 56	80.0	17	M 16	6	105.00	**64.60**
138085	BSO-ZN-60	Rd/M 60	M 60	85.0	17	M 16	6	125.00	**66.60**

Fixing Bolt for Super Anchor – galvanized steel

Ref. no.	Type	System size	Thread size	Dimensions			Packing unit	Weight approx.	Price plus RTZ
				h [mm]	SW [mm]	M_i [mm]	[pieces]	[kg/100 pcs]	[EUR/pcs]
186752	BSS-ZN-55	Z55	Rd 22	33.0	8	M 8	1	6.00	**18.45**
186753	BSS-ZN-110	Z110	Rd 32	48.0	14	M 10	1	18.00	**27.70**
186754	BSS-ZN-220	Z220	Rd 48	58.0	14	M 10	1	60.00	**54.60**

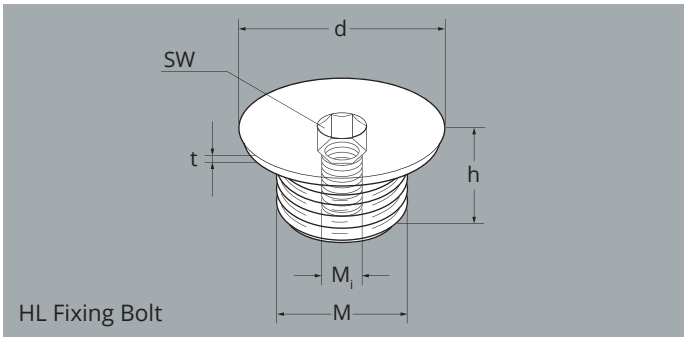

HL Fixing Bolt

HL Fixing Bolt – galvanized steel – for HL Lifting Anchor

Ref. no.	Type	Thread size	Dimensions					Packing unit	Weight approx.	Price plus RTZ
			h [mm]	d [mm]	t [mm]	SW [mm]	M_i [mm]	[pieces]	[kg/100 pcs]	[EUR/pcs]
268436	**BHL-42**	M 42	35	67.5	5	17	M 16	1	33.00	**on request**
232729	**BHL-52**	M 52	40	80.0	5	17	M 16	1	60.00	**on request**

Closure by means of small external cap or shallow cover cap possible.

Fixing Screw for threaded anchor system

Use

- Connection of threaded anchors with fixing bolts through the formwork

Your advantages

- Easy to screw by hand via L-shape and wing nut
- Suitable for different formwork thicknesses
- Reusable

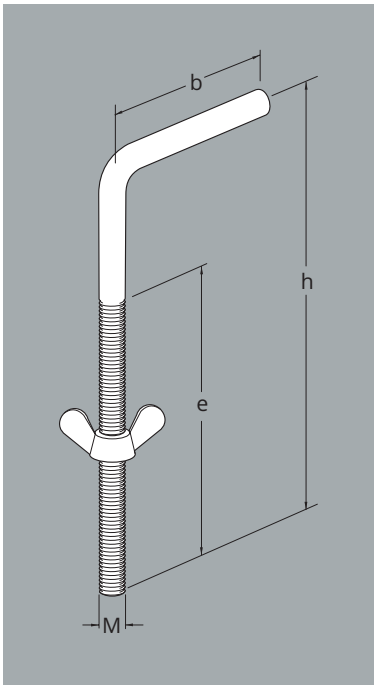

Fixing Screw – galvanized steel – for Fixing Bolts

Ref. no.	Type	For fixing bolts	Thread size	Dimensions			Packing unit	Weight approx.	Price plus RTZ
				b [mm]	e [mm]	h [mm]	[pieces]	[kg/100 pcs]	[EUR/pcs]
118542	**FIX-ZN-6**	M 12	M 6	60	80	120	1	6.00	**4.10**
118543	**FIX-ZN-8**	M 14/16/18/20. Rd 22	M 8	60	80	120	1	11.00	**4.50**
118544	**FIX-ZN-10**	M 24/30/36. Rd 32	M 10	60	110	150	1	12.62	**6.40**
118547	**FIX-ZN-16**	M 42/52/56/60. Rd 48	M 16	60	130	180	1	46.00	**12.75**

Recess Disc for threaded anchor system

Use

- In combination with separately available fixing bolts, the Recess Discs serve to enlarge the recess diameter of formwork fixings
- Required for the use of rotary, special or Super Lifters as lifting keys, for recessed installation of threaded anchors
- Simply plug the Recess Disc together with the Fixing Bolt middle
- For Super Anchors, screw together with a special fixing bolt and matching fixing screw
- Can be bolted to the formwork by screwing with a fixing screw or nailing through nail holes

Your advantages

- Modular system – plug together/screw with existing fixing bolt, if necessary
- Reusable

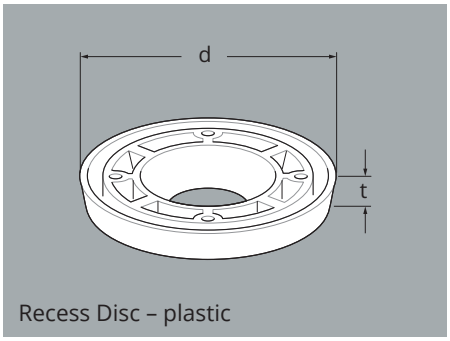

Recess Disc – plastic

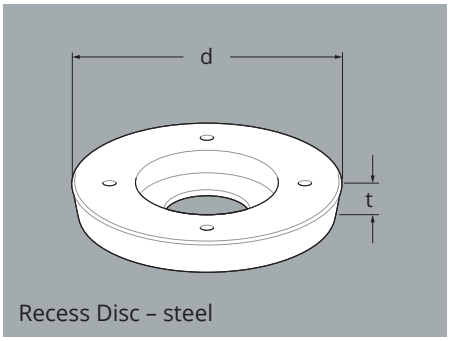

Recess Disc – steel

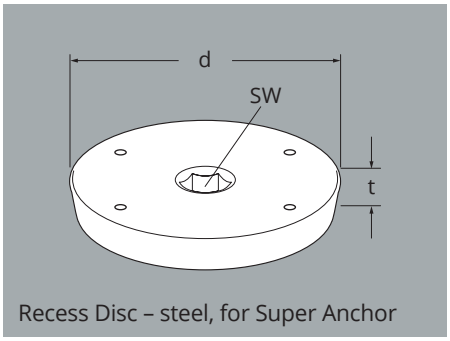

Recess Disc – steel, for Super Anchor

Recess Disc – plastic – for Fixing Bolt middle

Ref. no.	Type	Colour coding	For Fixing Bolt middle	Dimensions		Packing unit	Weight approx.	Price plus RTZ
				d [mm]	t [mm]	[pieces]	[kg/100 pcs]	[EUR/pcs]
118442	**AT-K-12**	Pastel orange	M 12	50.5	10	1	0.93	**1.45**
118445	**AT-K-14**	Pure white	M 14	55.5	10	1	1.15	**1.70**
118448	**AT-K-16**	Flame red	M 16	59.5	10	1	1.25	**1.94**
118451	**AT-K-18**	Light pink	M 18	62.5	10	1	1.36	**2.21**
118453	**AT-K-20**	Pastel green	M 20	73.5	10	1	1.70	**2.41**
118455	**AT-K-24**	Anthracite grey	M 24	78.5	12	1	2.50	**3.40**
118457	**AT-K-30**	Emerald green	M 30	94.5	12	1	3.20	**4.45**
118459	**AT-K-36**	Light blue	M 36	105.5	12	1	4.10	**6.05**
118461	**AT-K-42**	Silver grey	M 42	115.5	15	1	6.20	**8.65**
118463	**AT-K-52**	Sulphur yellow	M 52	135.5	15	1	6.70	**14.65**

Recess Disc – galvanized steel – for Fixing Bolt middle

Ref. no.	Type	For Fixing Bolt middle	Dimensions		Packing unit	Weight approx.	Price plus RTZ
			d [mm]	t [mm]	[pieces]	[kg/100 pcs]	[EUR/pcs]
118443	**AT-ZN-12**	M 12	50.5	10	1	11.50	**27.00**
118446	**AT-ZN-14**	M 14	55.5	10	1	13.50	**27.55**
118449	**AT-ZN-16**	M 16	59.5	10	1	16.00	**27.60**
118452	**AT-ZN-18**	M 18	62.5	10	1	16.50	**39.20**
118454	**AT-ZN-20**	M 20	73.5	10	1	25.00	**39.80**
118456	**AT-ZN-24**	M 24	78.5	12	1	32.00	**43.60**
118458	**AT-ZN-30**	M 30	94.5	12	1	47.00	**49.50**
118460	**AT-ZN-36**	M 36	105.5	12	1	56.00	**61.20**
118462	**AT-ZN-42**	M 42	115.5	15	1	80.00	**71.30**
118464	**AT-ZN-52**	M 52	135.5	15	1	110.00	**79.00**

Recess Disc – galvanized steel – for Super Anchor

Ref. no.	Type	System size	Dimensions			Packing unit	Weight approx.	Price plus RTZ
			d [mm]	t [mm]	SW [mm]	[pieces]	[kg/100 pcs]	[EUR/pcs]
188766	**ATS-ZN-55**	Z55	89.0	20	10	1	70.00	**37.00**
188767	**ATS-ZN-110**	Z110	118.0	20	14	1	160.00	**46.30**
188768	**ATS-ZN-220**	Z220	128.9	20	14	1	190.00	**54.60**

Magnetic Disc

Use

- Simple fixing of threaded anchors to steel formwork
- Screw the magnetic disc into the anchor and fix it to the formwork with the magnetic plate

Your advantages

- No drilling and welding necessary on the formwork
- Reusable
- Robust components for durability
- Suitable for the use of swivel eyes and special lifting loops
- Different, coordinated closure solutions available

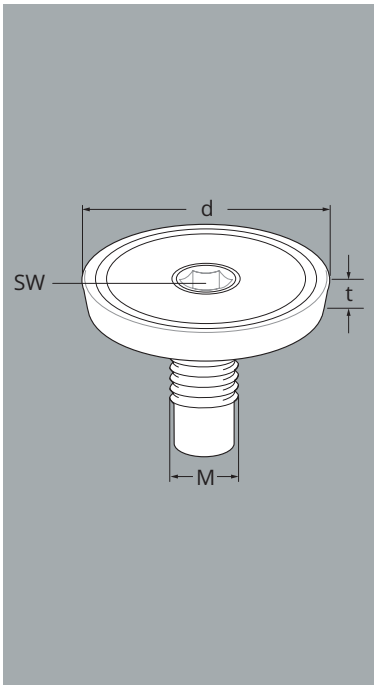

Magnetic Disc – galvanized steel

Ref. no.	Type	For thread	Thread size	Dimensions			Adhesive force	Packing unit	Weight approx.	Price plus RTZ
				d [mm]	t [mm]	SW [mm]	min [kg]	[pieces]	[kg/100 pcs]	[EUR/pcs]
118564	**MT-ZN-12**	Rd/M 12	M 12	50.5	10.5	5	45	2	14.00	**104.00**
118567	**MT-ZN-14**	Rd/M 14	M 14	55.5	10.5	6	45	2	15.00	**105.50**
118570	**MT-ZN-16**	Rd/M 16	M 16	59.2	10.5	6	63	2	19.00	**106.50**
118572	**MT-ZN-18**	Rd/M 18	M 18	62.5	10.5	6	63	2	21.00	**113.50**
118574	**MT-ZN-20**	Rd/M 20	M 20	73.5	10.5	6	100	1	32.00	**114.50**
118576	**MT-ZN-24**	Rd/M 24	M 24	78.2	12.5	8	100	1	46.00	**117.50**
118579	**MT-ZN-30**	Rd/M 30	M 30	94.2	12.5	8	100	1	61.00	**165.50**
118581	**MT-ZN-36**	Rd/M 36	M 36	105.2	12.5	8	100	1	80.00	**177.00**
311306	**MT-ZN-42**	Rd/M 42	M 42	115.5	15.5	14	150	1	170.00	**264.00**
311307	**MT-ZN-52**	Rd/M 52	M 52	135.5	15.5	14	150	1	260.00	**286.00**

Cover Cap

Use

- Permanent closure of threaded anchors
- Adapted to various PFEIFER formwork fixings – assignment via selection aids
- Cover caps are simply screwed into the anchor.
- Different installation levels of the anchors, lockable – shallow, middle, deep

Your advantages

- High quality exterior view
- Time-saving anchor closures
- Protection against corrosion
- Slot for easy screwing in and out using a screwdriver

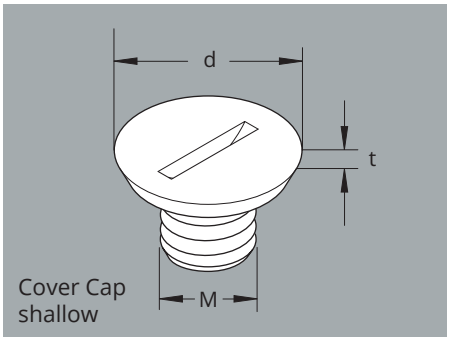

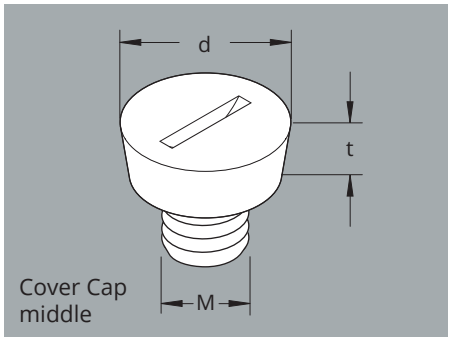

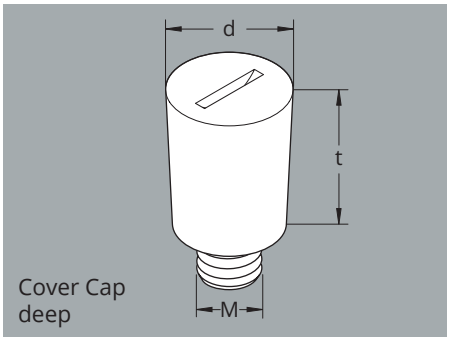

Cover Cap shallow – stainless steel

Ref. no.	Type	For thread	Thread size	Dimensions		Packing unit	Weight approx.	Price plus RTZ
				d [mm]	t [mm]	[pieces]	[kg/100 pcs]	[EUR/pcs]
227921	**VSF-VA-12**	Rd/M 12	M 12	22.5	3.0	1	2.00	**12.40**
227922	**VSF-VA-14**	Rd/M 14	M 14	25.5	3.0	1	2.40	**14.25**
227923	**VSF-VA-16**	Rd/M 16	M 16	29.5	3.5	1	4.00	**16.55**
227924	**VSF-VA-18**	Rd/M 18	M 18	32.5	3.5	1	5.00	**18.35**
227925	**VSF-VA-20**	Rd/M 20	M 20	36.5	4.0	1	8.00	**20.75**
227926	**VSF-VA-24**	Rd/M 24	M 24	39.5	4.0	1	10.00	**24.95**
227927	**VSF-VA-30**	Rd/M 30	M 30	48.0	4.5	1	18.00	**29.80**
227928	**VSF-VA-36**	Rd/M 36	M 36	57.5	4.5	1	30.00	**37.70**
227929	**VSF-VA-42**	Rd/M 42	M 42	66.0	5.0	1	43.00	**51.60**
227930	**VSF-VA-52**	Rd/M 52	M 52	79.0	5.0	1	73.00	**65.80**

Cover Cap middle – stainless steel

Ref. no.	Type	For thread	Thread size	Dimensions d [mm]	Dimensions t [mm]	Packing unit [pieces]	Weight approx. [kg/100 pcs]	Price plus RTZ [EUR/pcs]
227905	**VSM-VA-12**	Rd/M 12	M 12	23.0	8.5	1	4.00	**14.10**
227906	**VSM-VA-14**	Rd/M 14	M 14	26.0	8.5	1	5.00	**15.90**
227907	**VSM-VA-16**	Rd/M 16	M 16	30.0	8.5	1	7.00	**18.35**
227908	**VSM-VA-18**	Rd/M 18	M 18	33.0	8.5	1	9.00	**20.50**
227909	**VSM-VA-20**	Rd/M 20	M 20	36.5	8.0	1	11.00	**23.25**
227910	**VSM-VA-24**	Rd/M 24	M 24	40.0	10.0	1	16.00	**29.95**
227911	**VSM-VA-30**	Rd/M 30	M 30	48.0	10.0	1	25.00	**35.10**
227912	**VSM-VA-36**	Rd/M 36	M 36	58.0	10.0	1	40.00	**44.60**
227913	**VSM-VA-42**	Rd/M 42	M 42	66.5	13.0	1	63.00	**57.70**
227914	**VSM-VA-52**	Rd/M 52	M 52	79.0	13.0	1	101.00	**72.50**

Cover Cap deep – stainless steel

Ref. no.	Type	For thread	Thread size	Dimensions d [mm]	Dimensions t [mm]	Packing unit [pieces]	Weight approx. [kg/100 pcs]	Price plus RTZ [EUR/pcs]
227883	**VST-VA-12**	Rd/M 12	M 12	23.0	30.0	1	10.00	**17.85**
227894	**VST-VA-14**	Rd/M 14	M 14	26.0	30.0	1	13.00	**19.95**
227895	**VST-VA-16**	Rd/M 16	M 16	30.0	30.0	1	18.00	**22.60**
227896	**VST-VA-18**	Rd/M 18	M 18	33.0	30.0	1	22.00	**26.55**
227897	**VST-VA-20**	Rd/M 20	M 20	37.0	30.0	1	28.00	**29.20**
227898	**VST-VA-24**	Rd/M 24	M 24	40.5	30.0	1	35.00	**34.60**
227899	**VST-VA-30**	Rd/M 30	M 30	49.0	30.0	1	53.00	**41.80**
227900	**VST-VA-36**	Rd/M 36	M 36	58.5	30.0	1	81.00	**53.50**
227901	**VST-VA-42**	Rd/M 42	M 42	67.0	30.0	1	109.00	**73.40**
227902	**VST-VA-52**	Rd/M 52	M 52	80.0	30.0	1	165.00	**91.20**

Cover Plate

Use

- Permanent closure of threaded anchors
- Adapted to various PFEIFER formwork fixings – assignment via selection aids
- Stainless steel Cover Plates are simply screwed into the anchor.
- Concrete Cover Plates are glued into the anchor.

Your advantages

- High quality exterior view
- Time-saving anchor closures
- Protection against corrosion
- Hexagon socket for easy screwing and unscrewing by means of Allen key (stainless steel/steel version)

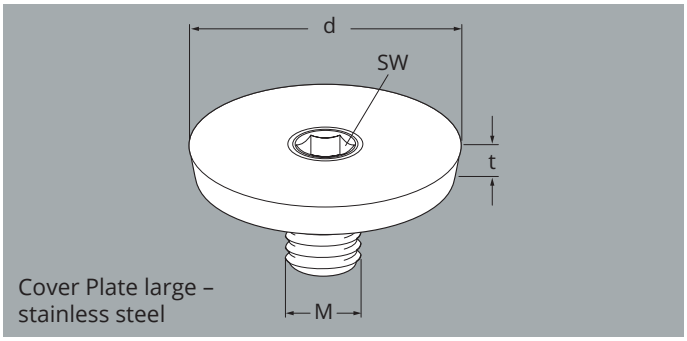

Cover Plate large – stainless steel

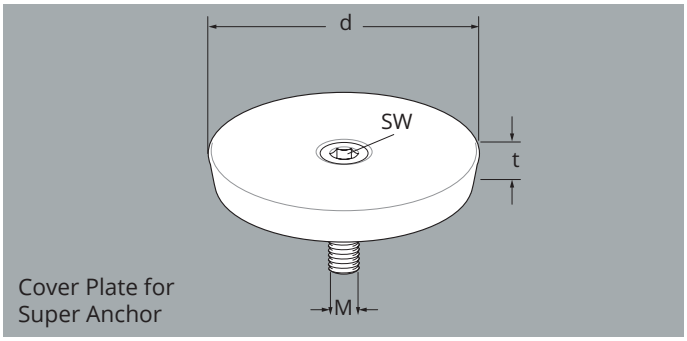

Cover Plate for Super Anchor

Cover Plate large – stainless steel

Ref. no.	Type	For thread	Thread size	Dimensions			Packing unit	Weight approx.	Price plus RTZ
				SW [mm]	d [mm]	t [mm]	[pieces]	[kg/100 pcs]	[EUR/pcs]
135388	**VT-VA-12**	Rd/M 12	M 12	5	50.0	10	20	16.58	**24.10**
135392	**VT-VA-14**	Rd/M 14	M 14	5	55.0	10	20	20.41	**29.80**
135390	**VT-VA-16**	Rd/M 16	M 16	5	59.0	10	20	23.89	**32.50**
135393	**VT-VA-18**	Rd/M 18	M 18	5	62.0	10	20	26.89	**37.00**
135385	**VT-VA-20**	Rd/M 20	M 20	5	73.0	10	20	36.91	**43.20**
135395	**VT-VA-24**	Rd/M 24	M 24	6	77.5	12	20	44.00	**54.90**
135394	**VT-VA-30**	Rd/M 30	M 30	6	93.5	12	6	66.00	**66.60**
135379	**VT-VA-36**	Rd/M 36	M 36	6	104.5	12	6	99.40	**83.60**
135396	**VT-VA-42**	Rd/M 42	M 42	10	114.5	15	4	156.34	**100.50**
135377	**VT-VA-52**	Rd/M 52	M 52	10	134.5	15	4	222.63	**129.50**

Cover Plate – galvanized steel – for Super Anchor

Ref. no.	Type	System size	Thread size	Dimensions			Packing unit	Weight approx.	Price plus RTZ
				SW [mm]	d [mm]	t [mm]	[pieces]	[kg/100 pcs]	[EUR/pcs]
188771	**VTS-ZN-55**	Z55	M 22	5	89.0	20	1	70.00	**37.00**
188770	**VTS-ZN-110**	Z110	M 32	6	118.0	20	1	160.00	**46.30**
188769	**VTS-ZN-220**	Z220	M 48	6	128.9	20	1	170.00	**54.60**

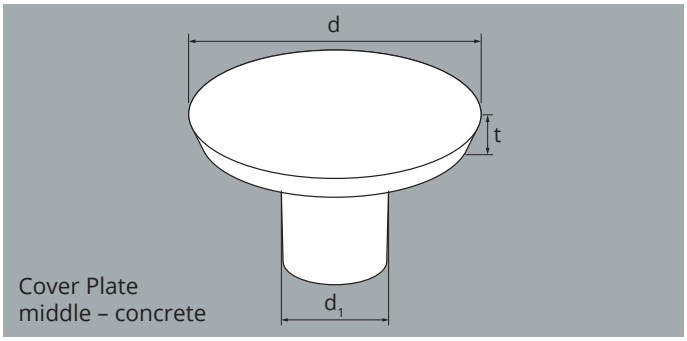

Cover Plate middle – concrete

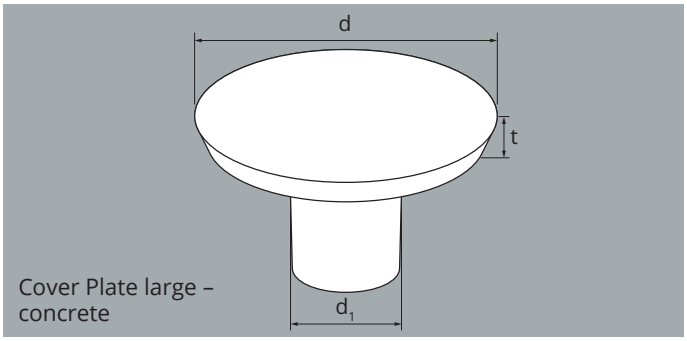

Cover Plate large – concrete

Cover Plate middle – FLOWSTONE concrete – colour similar to RAL 7044

Ref. no.	Type	For thread	Dimensions			Packing unit	Weight approx.	Price plus RTZ
			d [mm]	d_1 [mm]	t [mm]	[pieces]	[kg/100 pcs]	[EUR/pcs]
278350	**VTB-B-12**	Rd/M 12	22.5	10.5	7.5	50	0.70	**1.48**
278351	**VTB-B-14**	Rd/M 14	25.5	12.3	7.5	50	1.00	**1.54**
278352	**VTB-B-16**	Rd/M 16	29.0	14.3	7.5	50	1.40	**1.60**
278353	**VTB-B-18**	Rd/M 18	32.4	16.3	7.5	50	1.80	**1.65**
278354	**VTB-B-20**	Rd/M 20	35.5	18.1	7.0	50	2.00	**1.70**
278355	**VTB-B-24**	Rd/M 24	39.0	21.7	9.0	50	3.70	**1.81**
278356	**VTB-B-30**	Rd/M 30	47.6	27.7	9.0	50	6.80	**2.31**
278357	**VTB-B-36**	Rd/M 36	57.7	33.2	9.0	50	17.80	**2.36**
278358	**VTB-B-42**	Rd/M 42	66.2	38.7	12.0	30	18.00	**2.53**
278359	**VTB-B-52**	Rd/M 52	79.2	47.7	12.0	30	30.60	**2.64**

Cover Plate large – FLOWSTONE concrete – colour similar to RAL 7044

Ref. no.	Type	For thread	Dimensions			Packing unit	Weight approx.	Price plus RTZ
			d [mm]	d_1 [mm]	t [mm]	[pieces]	[kg/100 pcs]	[EUR/pcs]
278339	**VTM-B-12**	Rd/M 12	49.5	10.5	9.0	50	3.40	**2.31**
278340	**VTM-B-14**	Rd/M 14	54.5	12.3	9.0	50	4.20	**2.36**
278341	**VTM-B-16**	Rd/M 16	58.5	14.3	9.0	50	5.00	**2.43**
278342	**VTM-B-18**	Rd/M 18	61.5	16.3	9.0	35	6.10	**2.53**
278343	**VTM-B-20**	Rd/M 20	72.5	18.1	9.0	35	8.00	**3.05**
278344	**VTM-B-24**	Rd/M 24	77.2	21.7	11.0	30	11.60	**3.10**
278345	**VTM-B-30**	Rd/M 30	93.2	27.7	11.0	30	17.80	**3.50**
278346	**VTM-B-36**	Rd/M 36	104.2	33.2	11.0	15	24.00	**4.80**
278347	**VTM-B-42**	Rd/M 42	114.3	38.7	14.0	15	39.00	**5.25**
278348	**VTM-B-52**	Rd/M 52	134.3	47.7	14.0	10	57.20	**6.05**

External Plate for threaded anchor system

Use

- Permanent closure of threaded anchors
- Designed for PFEIFER Nail Disc
- Stainless steel External Plates are simply screwed into the anchor
- Concrete External Plates are glued into the anchor.

Your advantages

- High quality exterior view
- Time-saving anchor closures
- Protection against corrosion
- Hexagon socket for easy screwing and unscrewing by means of Allen key (stainless steel version)

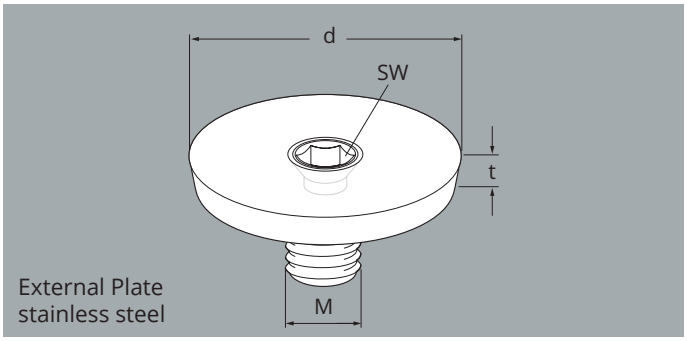

External Plate stainless steel

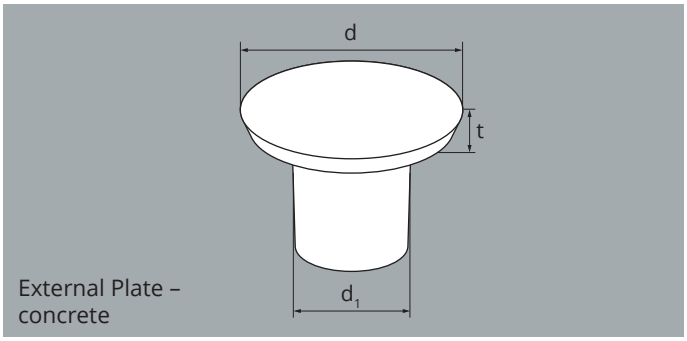

External Plate – concrete

External Plate – stainless steel

Ref. no.	Type	For thread	Thread size	Dimensions			Packing unit	Weight approx.	Price plus RTZ
				SW [mm]	d [mm]	t [mm]	[pieces]	[kg/100 pcs]	[EUR/pcs]
202668	**ATN-VA-12**	Rd/M 12	M 12	5	58	10	20	17.10	**25.35**
202667	**ATN-VA-16**	Rd/M 16	M 16	5	58	10	20	18.20	**34.20**
202666	**ATN-VA-20**	Rd/M 20	M 20	5	58	10	20	19.50	**45.30**
202665	**ATN-VA-24**	Rd/M 24	M 24	6	58	10	20	23.00	**57.90**
202664	**ATN-VA-30**	Rd/M 30	M 30	6	58	10	6	27.00	**70.20**

External Plate – FLOWSTONE concrete – colour similar to RAL 7044

Ref. no.	Type	For thread	Dimensions			Packing unit	Weight approx.	Price plus RTZ
			d [mm]	d_1 [mm]	t [mm]	[pieces]	[kg/100 pcs]	[EUR/pcs]
278360	**ATN-B-12**	Rd/M 12	57	10.5	9	50	3.80	**2.43**
278362	**ATN-B-16**	Rd/M 16	57	14.3	9	50	4.60	**2.43**
278363	**ATN-B-20**	Rd/M 20	57	18.1	9	50	5.20	**2.43**
278364	**ATN-B-24**	Rd/M 24	57	21.7	9	50	5.90	**2.43**
278365	**ATN-B-30**	Rd/M 30	57	27.7	9	50	7.70	**2.43**

External Cap

Use

- Flexible closure of threaded anchors
- Small version especially suitable for flush mounted anchors
- Large variant designed for various PFEIFER formwork fixings – assignment via selection aids

Your advantages

- Economical
- Time-saving anchor closures

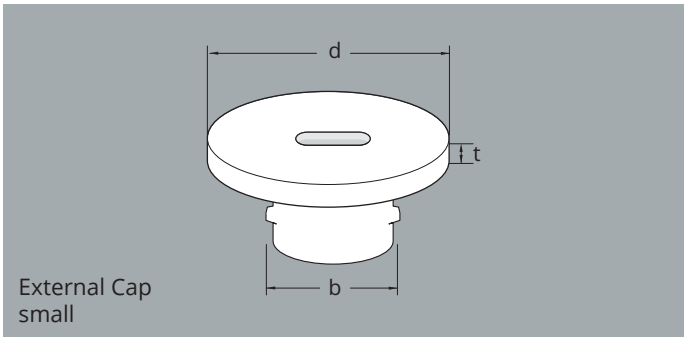

External Cap small

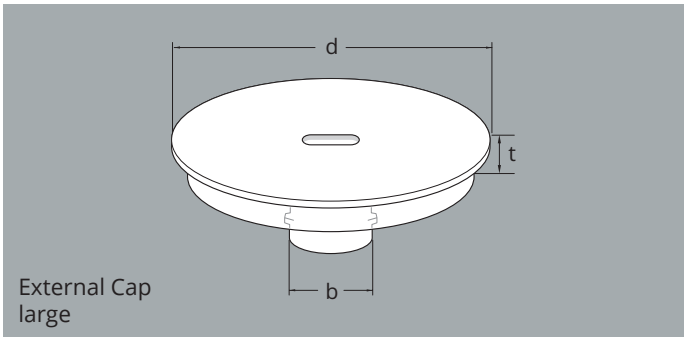

External Cap large

External Cap small – plastic)

Ref. no.	Type	For thread	Dimensions			Packing unit	Weight approx.	Price plus RTZ
			d [mm]	b [mm]	t [mm]	[pieces]	[kg/100 pcs]	[EUR/100 pcs]
118632	**ASK-12**	Rd/M 12	18.5	12	2.0	200	0.07	**11.05**
118634	**ASK-14**	Rd/M 14	21.5	14	2.0	200	0.13	**11.45**
118636	**ASK-16**	Rd/M 16	25.5	16	2.5	200	0.18	**11.90**
118639	**ASK-18**	Rd/M 18	28.5	18	2.5	200	0.20	**12.90**
118642	**ASK-20**	Rd/M 20	31.5	20	3.0	200	0.29	**14.15**
118644	**ASK-24**	Rd/M 24	35.0	24	3.0	200	0.38	**15.90**
118647	**ASK-30**	Rd/M 30	44.0	30	3.5	200	0.59	**23.05**
118649	**ASK-36**	Rd/M 36	52.5	36	3.5	100	0.67	**24.40**
135313	**ASK-42**	Rd/M 42	59.5	42	4.0	100	0.99	**48.70**
118653	**ASK-52**	Rd/M 52	73.0	52	4.0	100	1.40	**57.20**
137582	**ASK-56**	Rd/M 56	75.0	56	4.0	100	2.20	**261.50**
137583	**ASK-60**	Rd/M 60	80.0	60	4.0	100	2.30	**266.50**

External Cap large – plastic

Ref. no.	Type	For thread	Dimensions			Packing unit	Weight approx.	Price plus RTZ
			d [mm]	b [mm]	t [mm]	[pieces]	[kg/100 pcs]	[EUR/100 pcs]
118665	**ASG-12**	Rd/M 12	50	12	10	100	0.43	**53.50**
118666	**ASG-14**	Rd/M 14	55	14	10	100	0.56	**57.00**
118667	**ASG-16**	Rd/M 16	59	16	10	100	0.75	**61.20**
118668	**ASG-18**	Rd/M 18	62	18	10	100	0.88	**64.00**
118669	**ASG-20**	Rd/M 20	73	20	10	100	1.08	**65.20**
118670	**ASG-24**	Rd/M 24	78	24	12	100	1.40	**75.20**
118671	**ASG-30**	Rd/M 30	94	30	12	100	2.36	**84.90**
118672	**ASG-36**	Rd/M 36	105	36	12	100	2.88	**99.30**

Repair kit for slabs

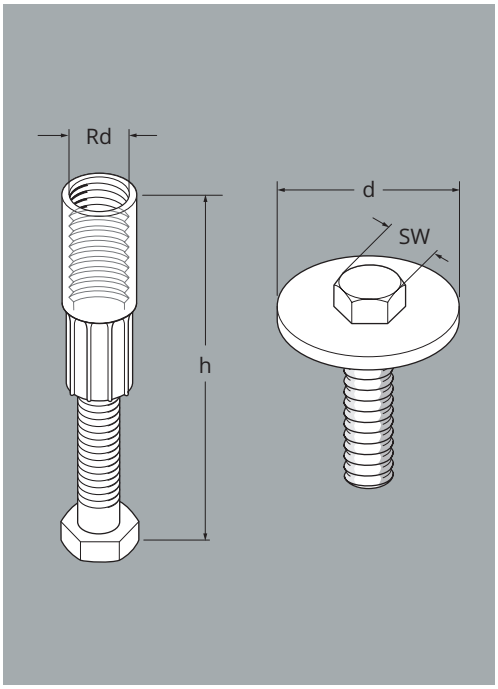

Use

- Later attachment of threaded lifting anchors for lifting slab/slab-like concrete elements
- Top-sided installation in the component
- Anchors are glued into pre-drilled holes in the component
- Parallel shear pull on the anchor with subsequently glued-in anchors up to a maximum load angle of 12.5°

Your advantages

- Later gluing in of unplanned anchors
- Concrete elements can be lifted later without installed lifting anchors
- Fully loadable after the injection mortar has cured
- Complete set, consisting of:
- bolt anchor, injection mortar KM5, screw and washer

Component recommendation

✓ Ceiling/panel

Repair Kit with Bolt Anchor – galvanized steel socket – for slabs

Ref. no.	Type	Colour coding-Guideline data clip (see page 43)	Thread size Anchor	Drilling dia-meter-Ø	Dimensions			Number of anchors/bolts	Weight approx.	Price plus RTZ
					h	d	SW			
				[mm]	[mm]	[mm]	[mm]	[Stk/Pk.]	[kg/Pk.]	[EUR/Pk.]
142496	RKD-ZN-16	Flame red	Rd 16	25	80	28	24	2	0.40	**44.80**
142497	RKD-ZN-20	Pastel green	Rd 20	30	127	37	30	2	0.70	**52.30**
142498	RKD-ZN-30	Emerald green	Rd 30	45	170	56	46	1	1.90	**61.40**

Repair Kit with Bolt Anchor – stainless steel socket – for slabs

Ref. no.	Type	Colour coding-Guideline data clip (see page 43)	Thread size Anchor	Drilling dia-meter-Ø	Dimensions			Number of anchors/bolts	Weight approx.	Price plus RTZ
					h	d	SW			
				[mm]	[mm]	[mm]	[mm]	[Stk/Pk.]	[kg/Pk.]	[EUR/Pk.]
142501	RKD-VA-16	Flame red	Rd 16	25	80	28	24	2	0.40	**62.70**
142500	RKD-VA-20	Pastel green	Rd 20	30	127	37	30	2	0.70	**84.70**
142499	RKD-VA-30	Emerald green	Rd 30	45	170	56	46	1	1.90	**89.80**

[1] Caution: health hazard. Refer to manufacturer's safety data sheet at www.fischer.de!

Repair kit for walls

Use

- Subsequent attachment of threaded lifting anchors for lifting wall-like concrete elements
- Front-sided installation in the component
- Anchors are glued into pre-drilled holes in the component
- Parallel shear pull on the anchor with subsequently glued-in anchors up to a maximum load angle of 12.5°

Your advantages

- Later gluing in of unplanned anchors
- Concrete elements can be lifted later without installed lifting anchors
- Fully loadable after the injection mortar has cured
- Complete set, consisting of:
- bar anchor, injection mortar KM5, screw and washer

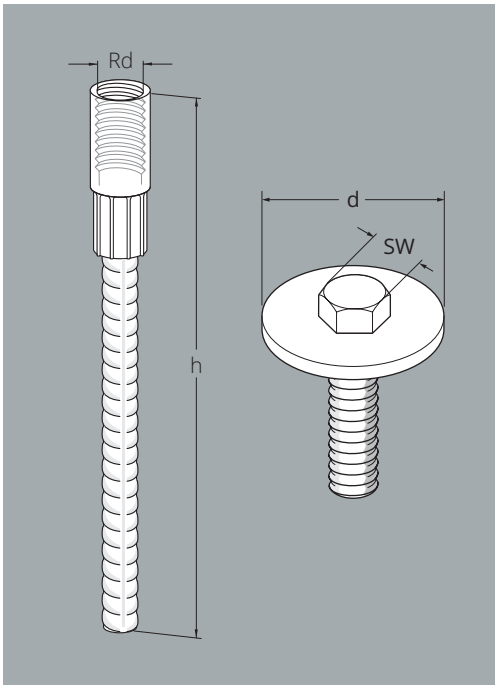

Component recommendation

☑ Precast wall

Repair Kit with Bar Anchor – galvanized steel socket – for walls

Ref. no.	Type	Colour coding-Guideline data clip (see page 43)	Thread size Anchor	Drilling dia-meter-Ø	Dimensions			Number of anchors/ bolts	Weight approx.	Price plus RTZ
				[mm]	h [mm]	d [mm]	SW [mm]	[Stk/Pk.]	[kg/Pk.]	[EUR/Pk.]
227271	RKW-ZN-16	Flame red	Rd 16	25	120	28	24	2	0.90	**42.60**
227270	RKW-ZN-20	Pastel green	Rd 20	30	180	37	30	2	1.25	**49.80**
227272	RKW-ZN-30	Emerald green	Rd 30	45	250	56	46	1	2.45	**58.50**

Repair Kit with Bar Anchor – stainless steel socket – for walls

Ref. no.	Type	Colour coding-Guideline data clip (see page 43)	Thread size Anchor	Drilling dia-meter-Ø	Dimensions			Number of anchors/ bolts	Weight approx.	Price plus RTZ
				[mm]	h [mm]	d [mm]	SW [mm]	[Stk/Pk.]	[kg/Pk.]	[EUR/Pk.]
227275	RKW-VA-16	Flame red	Rd 16	25	120	28	24	2	0.90	**59.50**
227274	RKW-VA-20	Pastel green	Rd 20	30	180	37	30	2	1.25	**80.30**
227273	RKW-VA-30	Emerald green	Rd 30	45	250	56	46	1	2.45	**85.20**

[1] Caution: health hazard. Refer to manufacturer's safety data sheet at www.fischer.de!

Repair kit accessories

Use

- Accessories for the later attachment of lifting anchors using a repair kit
- Brushes for perfect cleaning of the drill hole and corresponding brush holders
- Replacement mortar for gluing in anchors
- Mixing nozzles and applicator gun for the application of the mortar

Repair kit – accessories

Ref. no.	Type	Weight approx. [kg/100 pcs]	Price plus RTZ [EUR/pcs]
430461	KM5. 150 ml cartridge. 2 mixing nozzles	34.00	**27.25**
203848	Glue gun (for 150 ml cartridge). tradesman quality	77.00	**59.70**
165363	Additional mixing nozzle	46.00	**10.95**
142505	Glue gun (for 150 ml cartridge). simple version	0.90	**1.62**
227852	Cleaning brush diameter 18 mm	6.00	**12.75**
227854	Cleaning brush diameter 22 mm	8.00	**15.95**
227855	Cleaning brush diameter 27 mm	8.00	**17.20**
227856	Cleaning brush diameter 32 mm	9.00	**17.90**
227857	Cleaning brush diameter 47 mm	10.00	**19.15**
227858	Brush holder L = 185 mm	0.30	**19.15**

[1] Caution: health hazard. Refer to manufacturer's safety data sheet at www.fischer.de!

Adapter

Use

- Extension of threaded anchors installed recessed in relation to the accessible surface – for example, by subsequently placing a concrete slab on a wall
- Parallel shear pull on the anchor when using the adapter, maximum load angle up to 12.5°

Your advantages

- Later or planned extension of threaded anchors
- Reusable

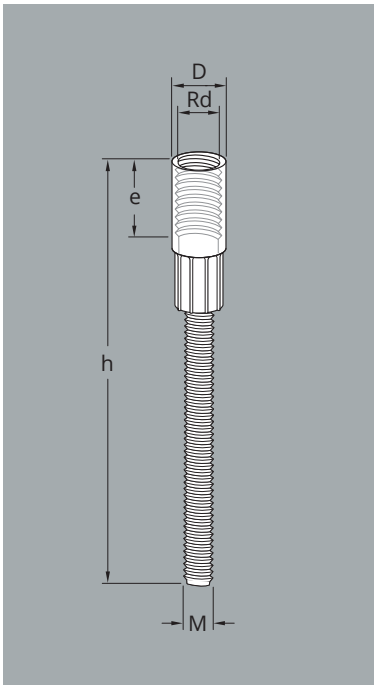

Adapter – galvanized steel

Ref. no.	Type	Internal thread size	External thread size	Dimensions			Packing unit	Weight approx.	Price plus RTZ
				D [mm]	h [mm]	e [mm]	[pieces]	[kg/pcs]	[EUR/pcs]
251476	**ADA-ZN-12**	Rd 12	M 12	15.0	279	22	1	0.21	**43.00**
251478	**ADA-ZN-14**	Rd 14	M 14	18.0	283	25	1	0.29	**45.30**
251479	**ADA-ZN-16**	Rd 16	M 16	21.0	285	27	1	0.41	**49.90**
251480	**ADA-ZN-18**	Rd 18	M 18	24.0	374	34	1	0.66	**56.80**
251481	**ADA-ZN-20**	Rd 20	M 20	27.2	375	35	1	0.85	**59.50**
251482	**ADA-ZN-24**	Rd 24	M 24	31.0	385	43	1	1.21	**62.60**
251483	**ADA-ZN-30**	Rd 30	M 30	40.0	400	56	1	2.10	**68.30**
251484	**ADA-ZN-36**	Rd 36	M 36	47.0	583	67	1	4.22	**75.60**
251485	**ADA-ZN-42**	Rd 42	M 42	54.0	598	80	1	5.72	**86.00**
251486	**ADA-ZN-52**	Rd 52	M 52	67.2	617	97	1	9.89	**149.50**
251487	**ADA-ZN-56**	Rd 56	M 56	70.0	602	80	1	10.56	**160.00**
251488	**ADA-ZN-60**	Rd 60	M 60	76.0	Customer specification	85	1	on request	**on request**

CE

Reworking Screw

Use

- Removal of penetrated concrete residues from the threads of threaded anchors
- Directing of concrete residues through clearing slots

Your advantages

- Easier screwing together of system components
- Ensure usability of lifting anchors cast in concrete
- Reusable

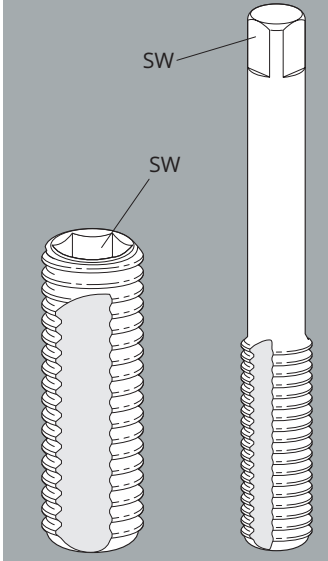

Reworking Screw – for threads of lifting anchors with Rd thread

Ref. no.	Type	For thread	Dimension SW [mm]	Packing unit [pieces]	Weight approx. [kg/100 pcs]	Price plus RTZ [EUR/pcs]
118604	**NAS-BK-12**	Rd 12	7	1	4.00	**36.20**
118605	**NAS-BK-14**	Rd 14	9	1	5.00	**38.20**
118606	**NAS-BK-16**	Rd 16	9	1	5.00	**39.80**
151691	**NAS-BK-18**	Rd 18	8	1	5.00	**40.20**
151690	**NAS-BK-20**	Rd 20	10	1	8.00	**40.80**
151682	**NAS-BK-24**	Rd 24	12	1	13.00	**43.80**
151681	**NAS-BK-30**	Rd 30	14	1	25.00	**49.60**
151680	**NAS-BK-36**	Rd 36	17	1	43.00	**57.90**
151679	**NAS-BK-42**	Rd 42	19	1	66.00	**87.80**
151678	**NAS-BK-52**	Rd 52	22	1	148.00	**141.50**
202582	**NAS-BK-56**	Rd 56	22	1	122.00	**202.50**
202583	**NAS-BK-60**	Rd 60	22	1	136.00	**219.50**

Combination options – Threaded anchor system

Anchor → Lifting key → Accessorieseber

		Anchor											
		Allround Anchor long Rd12–Rd52	**Allround Anchor short** Rd30–Rd52	**Waved Anchor long** Rd12–Rd60	**Waved Anchor short** Rd12–Rd42	**Super Waved Anchor** Z55/Z110/Z220 Rd22/Rd32/Rd48	**Bar Anchor** Rd12–Rd52	**Bar Anchor cropped** Rd20–Rd52	**Socket (anchor socket)** Rd12–Rd52	**Flat Steel Anchor** Rd12–Rd52	**SAS Flat Steel Anchor** SAS-A/B/C/D Rd14/Rd16/Rd24/Rd30	**Bolt Anchor** Rd12–Rd30	**SAS Bolt Anchor** SAS-V/A/B/C Rd12/Rd14/Rd16/Rd24
Lifting key	**Lifting Loop 0°–45°** Rd12–Rd52	✓	✓	✓	✓		✓	✓	✓	✓		✓	
	Lifting Loop waisted 0°–30° Rd24/Rd30/Rd36/Rd42/Rd52	✓	✓	✓	✓		✓	✓	✓	✓		✓	
	Flared Lifting Loop 0°–90° Rd12/Rd16/Rd20/Rd24/Rd30/Rd36	✓	✓	✓	✓		✓	✓	✓	✓		✓	
	Special Lifting Loop 0°–90° Rd12–Rd60	✓	✓	✓	✓		✓	✓	✓	✓		✓	
	Swivel Eye 0°–90° Rd12–Rd60	✓	✓	✓	✓		✓	✓	✓	✓		✓	
	Super Lifter 0°–90° Z55/Z110/Z220 Rd22/Rd32/Rd48					✓							
	Lifting Loop SAS-V/A/B/C/D M12/M14/M16/M24/M30										✓		✓
Accessories	**Nail Disc** M12–M52	✓	✓	✓	✓		✓	✓		✓		✓	
	Nail Disc for swivel eye M36–M52	✓	✓	✓	✓		✓	✓		✓		✓	
	Fixing Bolt shallow M12–M52	✓	✓	✓	✓		✓	✓	✓	✓		✓	
	Fixing Bolt middle M12–M52	✓	✓	✓	✓		✓	✓	✓	✓		✓	
	Fixing Bolt deep M12–M52	✓	✓	✓	✓		✓	✓	✓	✓		✓	
	Fixing Bolt headless M12–M60	✓	✓	✓	✓		✓	✓	✓	✓	✓	✓	✓
	Fixing Bolt for Super Anchor Rd22/Rd32/Rd48					✓							
	Recess Disc – plastic, for M12-M52 for M12–M52	✓	✓	✓	✓		✓	✓	✓	✓		✓	
	Recess Disc – steel, for M12-M52 for M12–M52	✓	✓	✓	✓		✓	✓	✓	✓		✓	
	Recess Disc – steel, for Super Anchor for Rd22/Rd32/Rd48					✓							
	Magnetic Disc M12–M36	✓	✓	✓	✓		✓	✓	✓	✓		✓	
	Adapter Rd/M12–Rd60	✓	✓	✓	✓		✓	✓	✓	✓		✓	
	Data Clip for Rd12–Rd60	✓	✓	✓	✓		✓	✓	✓	✓		✓	
	SAS Data Clip for Rd12/Rd14/Rd16/Rd24/Rd30										✓		✓
	Reworking Screw for Rd12–Rd60	✓	✓	✓	✓		✓	✓	✓	✓	✓	✓	✓

Formwork fixing → Typeee of fixing → Lifting key

		Typeee of fixation to the formwork					Lifting key						
		Screw on through hole using fixing screw/M-screw Formwork material: wood, plastic, steel	**Screw-on without drilling using self-tapping screw** Formwork material: wood, plastic	**Nailing** Formwork material: wood, plastic	**With adhesive** Formwork material: wood, plastic, steel	**Magnetic table** Schalungsmaterial: steel	**Lifting Loop** 0°–45° Rd12–52	**Lifting Loop waisted** 0°–30° Rd24/Rd30/Rd36/Rd42/Rd52	**Flared Lifting Loop** 0°–90° Rd12/Rd16/Rd20/Rd24/Rd30/Rd36	**Special Lifting Loop** 0°–90° Rd12–Rd60	**Swivel Eye** 0°–90° Rd12–Rd60	**Super Lifter** 0°–90° Z55/Z110/Z220 Rd22/Rd32/Rd48	**Lifting Loop SAS**-V/A/B/C/D M12/M14/M16/M24/M30
Formwork fixing on the anchor	**Fixing Bolt headless** M12–M60 – flush with surface –	✓					✓	✓	✓	✓	✓		✓
	Befestigungsscrew for Superanchor Rd22/Rd32/Rd48 – flush with surface –	✓										✓	
	Fixing Bolt shallow M12–M52 – recessed –	✓					✓	✓	✓				
	Fixing Bolt middle M12–M52 – recessed –	✓					✓	✓	✓				
	Fixing Bolt deep M12–M52 – recessed –	✓					✓	✓					
	Recess Disc – plastic for M12–M36 in combination with Fixing Bolt middle – recessed –	✓	✓	✓	✓		✓	✓	✓	✓	✓		
	Recess Disc – plastic for M42/M52 in combination with Fixing Bolt middle – recessed –	✓	✓	✓	✓		✓	✓		✓	✓		
	Recess Disc – steel for M12–M36 in combination with Fixing Bolt middle – recessed –	✓	✓	✓			✓	✓	✓	✓	✓		
	Recess Disc steel for M42/M52 in combination with Fixing Bolt middle – recessed –	✓	✓	✓			✓	✓		✓	✓		
	Recess Disc – steel, for Super Anchor for Rd22/Rd32/Rd48 in combination with Fixing Bolt for Super Anchor – recessed –	✓	✓	✓								✓	
	Magnetic Disc M12–M36 – recessed –					✓	✓	✓	✓	✓	✓		
	Nail Disc M12/M16/M20/M24/M30 – recessed –		✓	✓	✓		✓	✓	✓	**Rd12, Rd16**	**Rd12**		
	Nail Disc M14/M18 – recessed –		✓	✓	✓		✓	✓		**Rd14**	**Rd14**		
	Nail Disc M36–M52 – recessed –		✓	✓	✓		✓	✓	✓				
	Nail Disc for swivel eye M36 – recessed –		✓	✓	✓		✓	✓	✓	✓	✓		
	Nail Disc for swivel eye M42/M52 – recessed –		✓	✓	✓		✓	✓		✓	✓		

Formwork fixing → Recess closure

Formwork fixing on the anchor	Recess closure										
	External Cap small – plastic	Cover Cap shallow – stainless steel	Cover Cap middle – concrete	Cover Cap middle – stainless steel	Cover Cap deep – stainless steel	External Cap large – plastic	Cover Plate large – concrete	Cover Plate large – stainless steel	Cover Plate for Super Anchor – galvanized steel	External Plate – concrete	External plate Stainless steel
Fixing Bolt headless M12–M60 – flush with surface –	✓										
Fixing Bolt for Super Anchor Rd22/Rd32/Rd48											
Fixing Bolt shallow M12–M52 – recessed –	✓	✓									
Fixing Bolt middle M12–M52 – recessed –	✓		✓	✓							
Fixing Bolt deep M12–M52 – recessed –	✓				✓						
Recess Disc – plastic for M12–M36 in combination with Fixing Bolt middle	✓	✓				✓	✓	✓			
Recess Disc – plastic for M42/M52 in combination with Fixing Bolt middle	✓	✓					✓	✓			
Recess Disc – steel for M12–M36 in combination with Fixing Bolt middle – recessed –	✓	✓				✓	✓	✓			
Recess Disc steel for M42/M52 in combination with Fixing Bolt middle – recessed –	✓	✓					✓	✓			
Recess Disc – steel, for Super Anchor for Rd22/Rd32/Rd48 in combination with Fixing Bolt for Super Anchor – recessed –									✓		
Magnetic Disc M12–M36 – recessed –	✓	✓				✓	✓	✓			
Nail Disc M12/M16/M20/M24/M30 – recessed –	✓	✓								✓	✓
Nail Disc M14/M18 – recessed –	✓	✓								✓	✓
Nail Disc M36–M52 – recessed –	✓	✓	✓	✓							
Nail Disc for swivel eye M36 – recessed –	✓	✓				✓	✓	✓			
Nail Disc for swivel eye M42/M52 – recessed –	✓	✓					✓	✓			

Dimensioning table – Threaded Anchor

Allround Anchor, Waved Anchor, Bar Anchor, Flat Steel Anchor, Bolt Anchor, Socket (anchor socket), Bar Anchor cropped

The following table can be used to quickly select the required anchor size.
If the installation situation is different, the calculation method according to the general dimensioning principles for lifting anchors can be used for an individual anchor dimensioning.

	↓ Number of load bearing anchors „n“ ↓											
	n = 1	n = 2				n = 3			n = 4			
Load angle[2] →	β ≤ 90°	β ≤ 12.5°	β ≤ 30°	β ≤ 45°	β ≤ 30° δ ≤ 90° [1]	β ≤ 12.5°	β ≤ 30°	β ≤ 45°	β ≤ 12.5°	β ≤ 30°	β ≤ 45°	β ≤ 30° δ ≤ 90° [1]
↓ Component weight [t] ↓		↓ Anchor size ↓										
1.0	Rd 18	Rd 14	Rd 14	Rd 16	Rd 14	Rd 12	Rd 12	Rd 14	Rd 12	Rd 12	Rd 12	Rd 12
1.5	Rd 20	Rd 16	Rd 16	Rd 18	Rd 16	Rd 14	Rd 14	Rd 16	Rd 12	Rd 14	Rd 14	Rd 14
2.0	Rd 30	Rd 18	Rd 18	Rd 20	Rd 18	Rd 16	Rd 16	Rd 18	Rd 14	Rd 14	Rd 16	Rd 14
2.5	Rd 30	Rd 20	Rd 20	Rd 24	Rd 20	Rd 16	Rd 18	Rd 18	Rd 16	Rd 16	Rd 16	Rd 16
3.0	Rd 30	Rd 20	Rd 24	Rd 30	Rd 24	Rd 18	Rd 18	Rd 20	Rd 16	Rd 16	Rd 18	Rd 16
3.5	Rd 36	Rd 24	Rd 30	Rd 30	Rd 30	Rd 18	Rd 20	Rd 24	Rd 16	Rd 18	Rd 20	Rd 18
4.0	Rd 36	Rd 30	Rd 30	Rd 30	Rd 30	Rd 20	Rd 24	Rd 24	Rd 18	Rd 18	Rd 20	Rd 18
4.5	Rd 36	Rd 30	Rd 30	Rd 36	Rd 30	Rd 20	Rd 24	Rd 30	Rd 18	Rd 20	Rd 24	Rd 20
5.0	Rd 42	Rd 30	Rd 30	Rd 36	Rd 30	Rd 24	Rd 30	Rd 30	Rd 20	Rd 20	Rd 24	Rd 20
5.5	Rd 42	Rd 30	Rd 36	Rd 36	Rd 36	Rd 24	Rd 30	Rd 30	Rd 20	Rd 24	Rd 30	Rd 24
6.0	Rd 42	Rd 30	Rd 36	Rd 36	Rd 36	Rd 30	Rd 30	Rd 30	Rd 20	Rd 24	Rd 30	Rd 24
6.5	Rd 52	Rd 36	Rd 36	Rd 36	Rd 36	Rd 30	Rd 30	Rd 30	Rd 24	Rd 24	Rd 30	Rd 24
7.0	Rd 52	Rd 36	Rd 36	Rd 42	Rd 36	Rd 30	Rd 30	Rd 36	Rd 24	Rd 30	Rd 30	Rd 30
7.5	Rd 52	Rd 36	Rd 36	Rd 42	Rd 36	Rd 30	Rd 30	Rd 36	Rd 24	Rd 30	Rd 30	Rd 30
8.0	Rd 52	Rd 36	Rd 36	Rd 42	Rd 36	Rd 30	Rd 36	Rd 36	Rd 30	Rd 30	Rd 30	Rd 30
8.5	Rd 52	Rd 36	Rd 42	Rd 42	Rd 42	Rd 30	Rd 36	Rd 36	Rd 30	Rd 30	Rd 30	Rd 30
9.0	Rd 52	Rd 36	Rd 42	Rd 52	Rd 42	Rd 30	Rd 36	Rd 36	Rd 30	Rd 30	Rd 36	Rd 30
9.5	Rd 52	Rd 42	Rd 42	Rd 52	Rd 42	Rd 36	Rd 36	Rd 36	Rd 30	Rd 30	Rd 36	Rd 30
10.0		Rd 42	Rd 42	Rd 52	Rd 42	Rd 36	Rd 36	Rd 36	Rd 30	Rd 30	Rd 36	Rd 30
10.5		Rd 42	Rd 42	Rd 52	Rd 42	Rd 36	Rd 36	Rd 42	Rd 30	Rd 30	Rd 36	Rd 30
11.0		Rd 42	Rd 52	Rd 52	Rd 52	Rd 36	Rd 36	Rd 42	Rd 30	Rd 36	Rd 36	Rd 36
11.5		Rd 42	Rd 52	Rd 52	Rd 52	Rd 36	Rd 36	Rd 42	Rd 30	Rd 36	Rd 36	Rd 36
12.0		Rd 42	Rd 52	Rd 52	Rd 52	Rd 36	Rd 36	Rd 42	Rd 30	Rd 36	Rd 36	Rd 36
12.5		Rd 52	Rd 52	Rd 52	Rd 52	Rd 36	Rd 36	Rd 42	Rd 36	Rd 36	Rd 36	Rd 36
13.0		Rd 52	Rd 52	Rd 52	Rd 52	Rd 36	Rd 42	Rd 42	Rd 36	Rd 36	Rd 36	Rd 36
13.5		Rd 52	Rd 52	Rd 52	Rd 52	Rd 36	Rd 42	Rd 52	Rd 36	Rd 36	Rd 36	Rd 36
14.0		Rd 52	Rd 52	–	Rd 52	Rd 36	Rd 42	Rd 52	Rd 36	Rd 36	Rd 42	Rd 36
14.5		Rd 52	Rd 52	–	Rd 52	Rd 42	Rd 42	Rd 52	Rd 36	Rd 36	Rd 42	Rd 36
15.0		Rd 52	Rd 52	–	Rd 52	Rd 42	Rd 42	Rd 52	Rd 36	Rd 36	Rd 42	Rd 36
15.5		Rd 52	Rd 52	–	Rd 52	Rd 42	Rd 42	Rd 52	Rd 36	Rd 36	Rd 42	Rd 36
16.0		Rd 52	Rd 52	–	Rd 52	Rd 42	Rd 52	Rd 52	Rd 36	Rd 36	Rd 42	Rd 36
16.5		Rd 52	Rd 52	–	Rd 52	Rd 42	Rd 52	Rd 52	Rd 36	Rd 36	Rd 42	Rd 36
17.0		Rd 52	–	–	–	Rd 42	Rd 52	Rd 52	Rd 36	Rd 42	Rd 42	Rd 42
17.5		Rd 52	–	–	–	Rd 42	Rd 52	Rd 52	Rd 36	Rd 42	Rd 52	Rd 42
18.0		Rd 52	–	–	–	Rd 42	Rd 52	Rd 52	Rd 36	Rd 42	Rd 52	Rd 42
18.5		Rd 52	–	–	–	Rd 52	Rd 52	Rd 52	Rd 36	Rd 42	Rd 52	Rd 42
19.0		Rd 56	–	–	–	Rd 52	Rd 52	Rd 52	Rd 42	Rd 42	Rd 52	Rd 42
19.5		Rd 56	–	–	–	Rd 52	Rd 52	Rd 52	Rd 42	Rd 42	Rd 52	Rd 42
20.0		Rd 56	–	–	–	Rd 52	Rd 52	Rd 52	Rd 42	Rd 42	Rd 52	Rd 42
20.5		Rd 56	–	–	–	Rd 52	–	–	Rd 42	–	–	–
21.0		Rd 56	–	–	–	Rd 52	–	–	Rd 42	–	–	–
21.5		Rd 56	–	–	–	Rd 52	–	–	Rd 42	–	–	–
22.0		Rd 56	–	–	–	Rd 52	–	–	Rd 42	–	–	–
22.5		Rd 56	–	–	–	Rd 52	–	–	Rd 42	–	–	–
23.0		Rd 60	–	–	–	Rd 52	–	–	Rd 42	–	–	–
30.0		Rd 60	–	–	–	Rd 56	–	–	Rd 52	–	–	–

[1] Set down/erect with floor contact

[2] Rd 56/Rd 60 for parallel shear pull > 12.5 ° → Contact us 08331/937-345 or support-bt@pfeifer.de

Basics

- Technical guideline VDI/BV-BS 6205 in interpretation of directive 2006/42/EC (machinery directive)
- Concrete strength from $f_{c,cube}$ = 15 N/mm²
- Symmetrical installation of the anchors in the center of gravity
- Lifting with portal or mobile crane:
- dynamic factor ψ_{dyn} = 1.3
- Observe the minimum degree of reinforcement of the component according to the technical information for the respective anchors
- For parallel and transverse shear pull, observe additional reinforcement according to the technical information of the respective anchors (depending on concrete strength)
- If necessary, retention reinforcement n the anchor is required (depending on the selected anchor Typeee)
- Observe minimum dimensions and distances according to the technical information for the respective anchors
- Number of load bearing anchors “n”, see examples below:

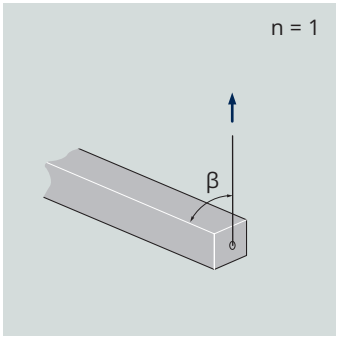

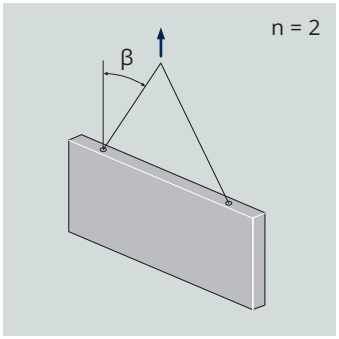

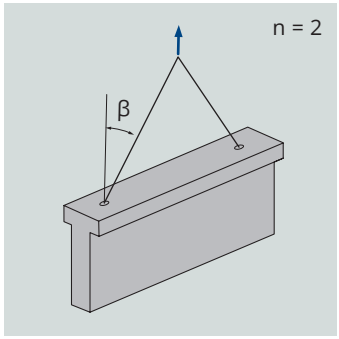

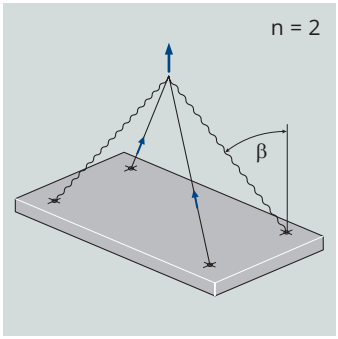

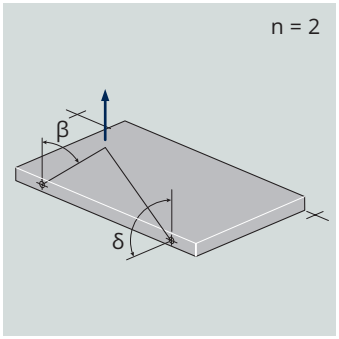

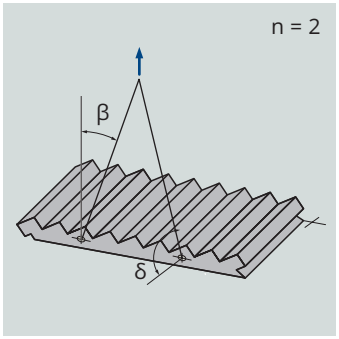

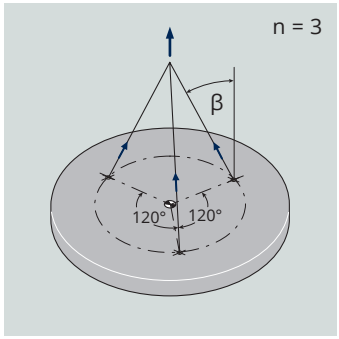

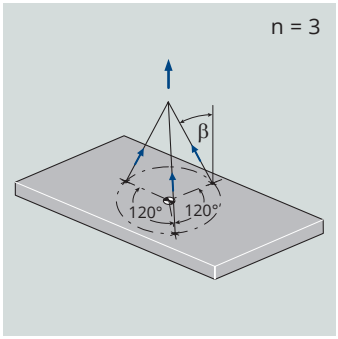

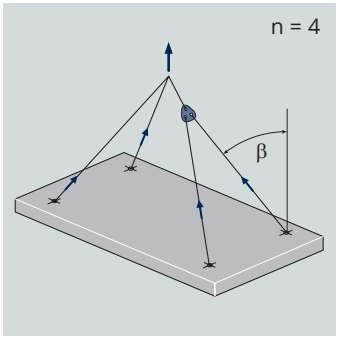

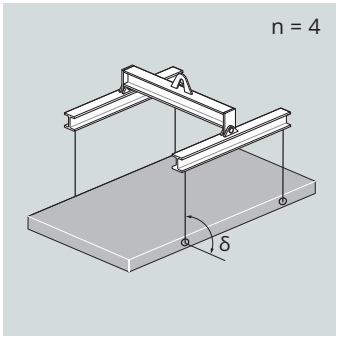

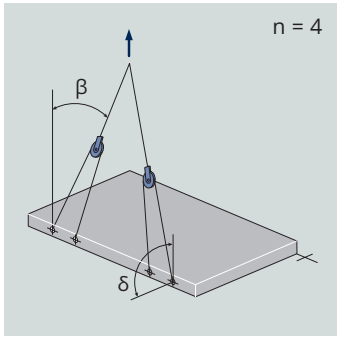

Dimensioning table – Threaded Anchor for stairs

Allround Anchor short

The following table can be used to quickly select the required anchor size for straight stair elements. In case of deviating installation situation (e.g. spiral staircases, landings, etc.) for an individual installation proposal, please contact our application consultants. Contact on the back of the catalogue.

	↓ Number of load bearing anchors „n“ ↓		
	n = 2	n = 2 (2 + 1)	n = 4
↓ Component weight [t] ↓	↓ Anchor size ↓		
1.0	Rd 20	Rd 20	Rd 20
1.5	Rd 20	Rd 20	Rd 20
2.0	Rd 20	Rd 20	Rd 20
2.5	Rd 24	Rd 24	Rd 20
3.0	Rd 30	Rd 30	Rd 20
3.5	Rd 30	Rd 30	Rd 20
4.0	Rd 36	Rd 36	Rd 20
4.5	Rd 36	Rd 36	Rd 20
5.0	Rd 36	Rd 36	Rd 24
5.5	Rd 36	Rd 36	Rd 24
6.0	–	–	Rd 30
6.5	–	–	Rd 30
7.0	–	–	Rd 30
7.5	–	–	Rd 36
8.0	–	–	Rd 36
8.5	–	–	Rd 36
9.0	–	–	Rd 36
9.5	–	–	Rd 36
10.0	–	–	Rd 36
10.5	–	–	Rd 36
11.0	–	–	Rd 36
11.5	–	–	Rd 36
11.8	–	–	Rd 36

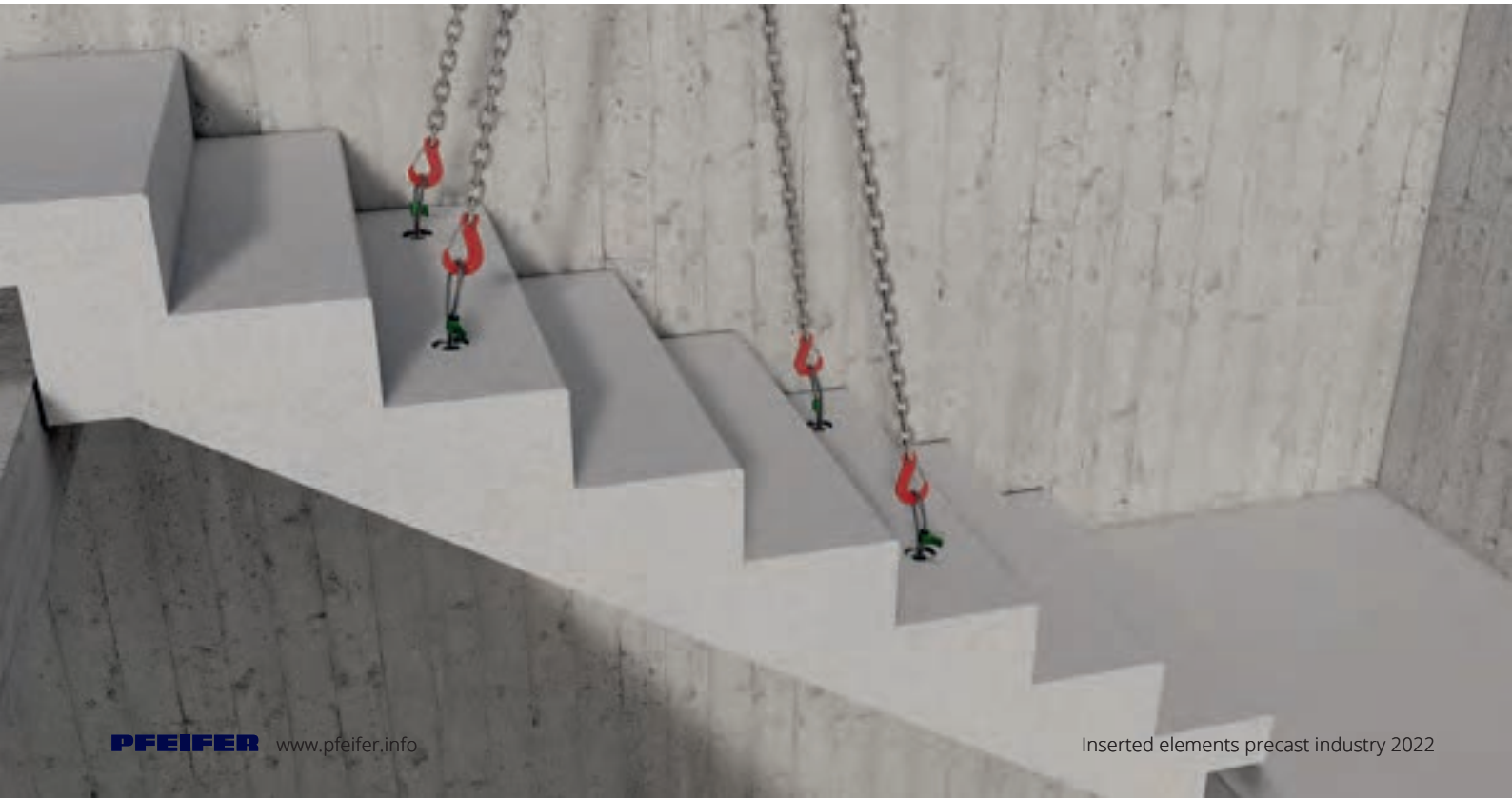

Basics

- Standardised application in straight precast stairs
- Installation of the anchors in steps
- Standard load cases:
- “Alignment in exact mounting position without ground contact” and “mounting”
- Technical guideline VDI/BV-BS 6205 in interpretation of directive 2006/42/EC (machinery directive)
- Concrete strength from $f_{c,cube}$ = 20 N/mm²
- Lifting with portal or mobile crane:
- dynamic factor Ψ_{dyn} = 1.3
- Observe the minimum degree of reinforcement of the waist slab according to the technical information for the anchor – steps can be executed without reinforcement!
- Maximum load angle per load case observed (see technical brochure for the anchor)
- Additional reinforcement required for the anchor (see technical brochure for the anchor)
- Compliance with all minimum dimensions and distances
- Symmetrical installation of the anchors in the centre of mass
- With three anchors, two of the anchors must be installed at the top of the stairs in the direction of travel (see picture below)
- At least two “free” steps between steps with built-in anchors
- Installation of the anchors only from the second step (starting from the staircase entrance and exit)
- Number of load bearing anchors “n”, see examples below:

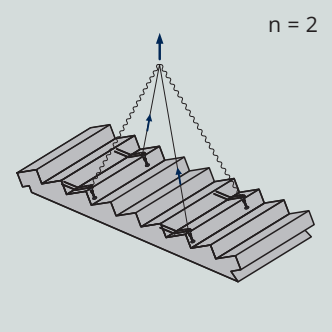

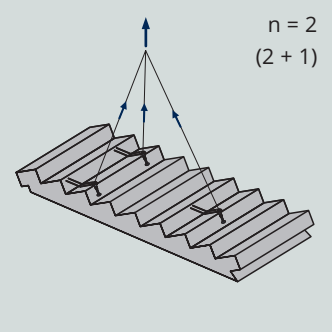

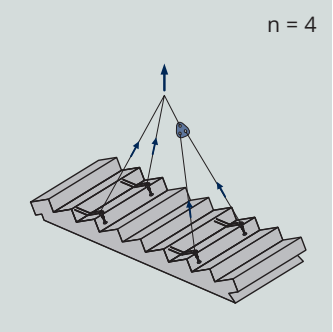

Spherical head anchor system

The main focus of the spherical head anchor system
for lifting precast concrete elements is on applications in which speed of attachment is paramount.
The system name “WK Quicklift” is indicative of the promise of fast attachment of lifting anchors.
The system also has different anchor versions for different applications.

Your advantages

- Working load limits from 13 kN (1.3 t) to 200 kN (20 t)
- Ideal for heavily reinforced structural elements
- Safe load application
- Economical due to quick attachment
- Clear labelling for safety

Guideline

- According to VDI BV-BS 6205 in interpretation of the EC Machinery Directive 2006/42/EC
- Safe work equipment as defined in health & safety legislation according to BetrSichV (Operational Safety Ordinance)

More information can be found at
www.pfeifer.info/
spherical-head-anchor-system

Spherical head anchor system

Anchor

DR Anchor 74
DR Anchor with eye 76
WK Anchor long 77
WK Anchor short 78
WK Bar Anchor 79
WK Bar Anchor cropped 80

Lifting Key

WK Quicklift 81

Accesories

WK Moulding Insert 82
Fixing Screw for spherical head anchor system 83

Technical information

Dimensioning tables – Spherical Head Anchor 84

DR Anchor

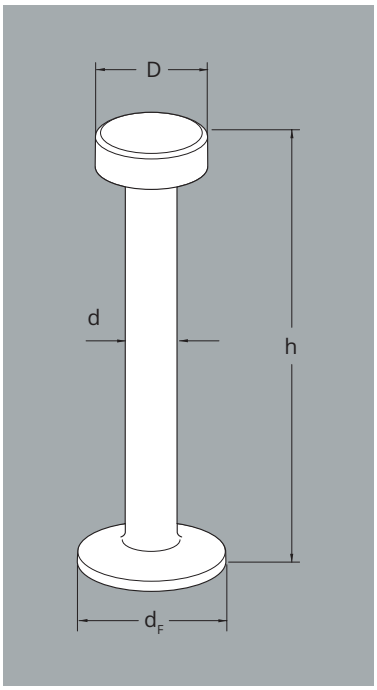

Use

- Spherical head lifting anchor with swaged anchor foot for lifting concrete elements
- Frontal and top-sided installation in the component
- To attach, place the anchor head in the slotted groove of the WK Quicklift as a lifting key.

Your advantages

- Time-saving insertion and removal of the lifting key (WK Quicklift)
- Different lengths for each load size freely selectable according to requirements
- Easy installation due to symmetrical shape
- All load directions possible
- Non-detachable and visible type identification in the anchor head

Component recommendation

✓ Precast wall ✓ Slab/panel ✓ Pipe/container ✓ Beam/girder/joist

✓ Foundation ✓ Balcony ✓ Column/rod-shaped component

DR Anchor – black steel

Ref. no.	Type	Dimensions				Packing unit	Weight approx.	Price plus RTZ
		h [mm]	D [mm]	d [mm]	d_F [mm]	[pieces]	[kg/100 pcs]	[EUR/pcs]
118237	**DR-BK-1.3–55**	55	18	10	25	200	6.00	**1.41**
118239	**DR-BK-1.3–65**	65	18	10	25	200	7.00	**1.67**
118241	**DR-BK-1.3–85**	85	18	10	25	200	8.00	**1.69**
118243	**DR-BK-1.3–120**	120	18	10	25	200	10.00	**1.85**
118244	**DR-BK-1.3–240**	240	18	10	25	100	17.00	**2.03**
118245	**DR-BK-2.5–45**	45	25	14	35	100	12.00	**1.96**
147320	**DR-BK-2.5–70**	70	25	14	35	100	16.00	**2.15**
118247	**DR-BK-2.5–85**	85	25	14	35	100	17.00	**2.17**
118248	**DR-BK-2.5–120**	120	25	14	35	75	21.00	**2.21**
118250	**DR-BK-2.5–140**	140	25	14	35	75	23.00	**2.63**
118251	**DR-BK-2.5–170**	170	25	14	35	50	27.00	**2.71**
161082	**DR-BK-2.5–210**	210	25	14	35	50	30.00	**2.99**
118253	**DR-BK-2.5–280**	280	25	14	35	50	40.00	**3.50**
118254	**DR-BK-5.0–75**	75	36	20	50	50	34.00	**3.80**
118255	**DR-BK-5.0–95**	95	36	20	50	30	41.00	**4.55**
118256	**DR-BK-5.0–120**	120	36	20	50	30	48.00	**4.85**
147323	**DR-BK-5.0–160**	160	36	20	50	30	56.00	**5.25**
118257	**DR-BK-5.0–180**	180	36	20	50	30	58.00	**5.35**
161754	**DR-BK-5.0–210**	210	36	20	50	25	69.00	**5.70**
118259	**DR-BK-5.0–240**	240	36	20	50	25	76.00	**6.10**
118260	**DR-BK-5.0–340**	340	36	20	50	15	101.00	**9.25**
138048	**DR-BK-5.0–480**	480	36	20	50	10	136.00	**11.60**
118261	**DR-BK-7.5–85**	85	46	24	60	30	58.00	**6.55**
138049	**DR-BK-7.5–95**	95	46	24	60	30	64.00	**6.55**

CE

DR Anchor – black steel

Ref. no.	Type	Dimensions				Packing unit	Weight approx.	Price plus RTZ
		h [mm]	D [mm]	d [mm]	d_f [mm]	[pieces]	[kg/100 pcs]	[EUR/pcs]
118262	**DR-BK-7.5–120**	120	46	24	60	25	73.00	**6.60**
138050	**DR-BK-7.5–140**	140	46	24	60	20	81.00	**7.25**
118263	**DR-BK-7.5–165**	165	46	24	60	20	89.00	**7.90**
138051	**DR-BK-7.5–200**	200	46	24	60	15	101.00	**9.05**
118265	**DR-BK-7.5–300**	300	46	24	60	10	136.00	**11.55**
138052	**DR-BK-7.5–540**	540	46	24	60	1	224.00	**17.75**
138053	**DR-BK-7.5–680**	680	46	24	60	5	282.00	**18.85**
118266	**DR-BK-10.0–120**	120	46	28	70	20	93.00	**12.25**
118267	**DR-BK-10.0–135**	135	46	28	70	15	103.00	**12.35**
138054	**DR-BK-10.0–150**	150	46	28	70	15	109.00	**12.50**
118268	**DR-BK-10.0–170**	170	46	28	70	15	118.00	**14.15**
138055	**DR-BK-10.0–200**	200	46	28	70	10	127.00	**14.55**
147288	**DR-BK-10.0–220**	220	46	28	70	15	144.00	**14.70**
147289	**DR-BK-10.0–250**	250	46	28	70	10	156.00	**15.00**
118270	**DR-BK-10.0–340**	340	46	28	70	10	198.00	**17.45**
135166	**DR-BK-10.0–680**	680	46	28	70	1	357.00	**27.30**
138056	**DR-BK-15.0–165**	165	69	34	85	10	197.00	**17.70**
138057	**DR-BK-15.0–200**	200	69	34	85	5	240.00	**18.45**
135167	**DR-BK-15.0–300**	300	69	34	85	5	304.00	**22.65**
118271	**DR-BK-15.0–400**	400	69	34	85	1	370.00	**28.30**
138058	**DR-BK-20.0–340**	340	69	39	99	1	438.00	**42.60**
118272	**DR-BK-20.0–500**	500	69	39	99	1	587.00	**44.70**

CE

DR Anchor with eye

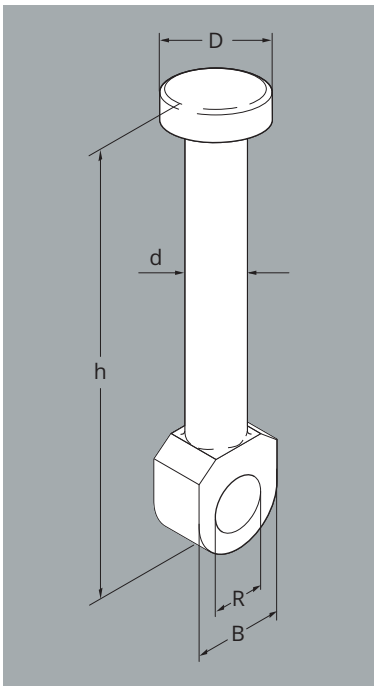

Use

- Spherical head lifting anchor with cross hole (“eye”) for lifting concrete elements
- Load is introduced via additional retention reinforcement, which is threaded through the cross hole
- Front-sided installation in the component
- To attach, place the anchor head in the slotted groove of the WK Quicklift as a lifting key.

Your advantages

- Rückveranchorung geometrisch flexibel
- Zeitsparendes Ein- and Aushängen des Lifting Keys (WK-Quicklift)
- Unverlierbare and sichtbare Typeenkennzeichnung im Anchorkopf

Component recommendation

✓ Precast wall

DR Anchor with eye – black steel

Ref. no.	Type	Dimensions					Packing unit	Weight approx.	Price plus RTZ
		h [mm]	D [mm]	d [mm]	B [mm]	R [mm]	[pieces]	[kg/100 pcs]	[EUR/pcs]
177882	**DRA-BK-1.3-65**	65	18	10	22	10	200	6.00	**1.73**
166284	**DRA-BK-2.5-90**	90	25	14	32	15	125	16.00	**2.47**
171659	**DRA-BK-5.0-90**	90	36	20	43	20	40	43.00	**9.10**
171660	**DRA-BK-10.0-115**	115	46	28	63	31	15	117.0	**17.05**

CE

WK Anchor long

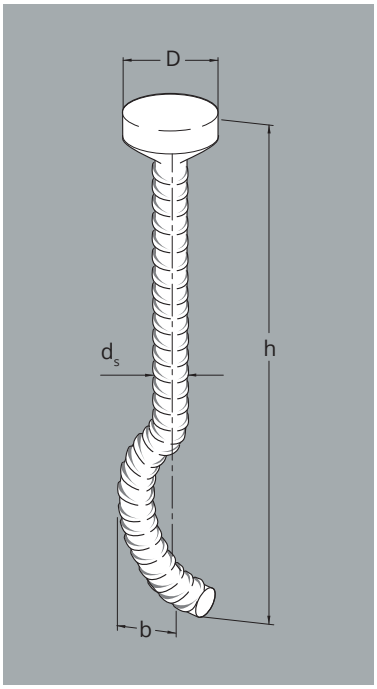

Use

- Spherical head lifting anchor with corrugated bar for lifting concrete elements
- Front-sided installation in the component
- To attach, place the anchor head in the slotted groove of the WK Quicklift as a lifting key.

Your advantages

- Careful load application by corrugated bar for thin components
- Time-saving insertion and removal of the lifting key (WK Quicklift)
- Non-detachable and visible type identification in the anchor head

Component recommendation

- ✓ Precast wall
- ✓ Beam/girder/joist (type WKB)
- ✓ TT slabs
- ✓ Column/rod-shaped component

WK Anchor long – black steel

Ref. no.	Type	Dimensions				Packing unit	Weight approx.	Price plus RTZ
		d_s [mm]	D [mm]	h [mm]	b [mm]	[pieces]	[kg/100 pcs]	[EUR/pcs]
276038	**WKL-BK-2.0**	14	26	350	32	50	47.00	**4.00**
276039	**WKL-BK-2.5**	14	26	400	32	25	52.00	**4.15**
276040	**WKL-BK-4.0**	20	36	450	45	1	124.00	**8.65**
276041	**WKL-BK-5.0**	20	36	520	45	1	141.00	**9.05**
276043	**WKL-BK-6.3**	25	47	570	42	1	244.00	**15.85**
276044	**WKL-BK-8.0**	28	47	620	52	1	323.00	**18.65**
288803	**WKB-BK-10.0**	28	47	550	52	1	290.00	**16.45**
276045	**WKL-BK-10.0**	28	47	900	52	1	459.00	**23.05**
288804	**WKB-BK-15.0**	36	70	650	73	1	587.30	**31.90**
277957	**WKL-BK-15.0**	36	70	1200	73	1	1026.00	**47.90**
288805	**WKB-BK-20.0**	40	70	800	71	1	877.50	**49.50**
277958	**WKL-BK-20.0**	40	70	1400	82	1	1469.00	**63.90**

CE

WK Anchor short

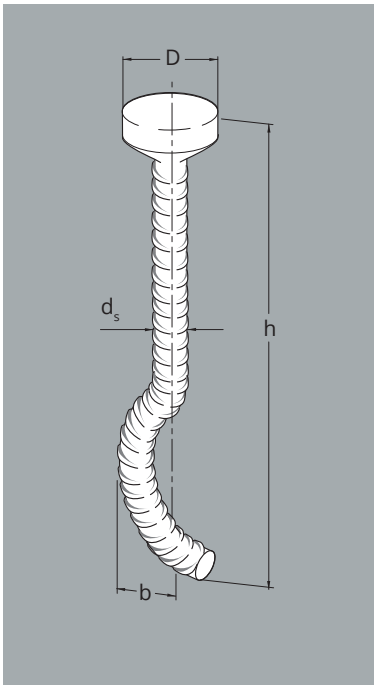

Use

- Spherical head lifting anchor with corrugated bar for lifting concrete elements
- Top-sided installation in the component
- To attach, place the anchor head in the slotted groove of the WK Quicklift as a lifting key.

Your advantages

- Careful load application by corrugated bar for thin components
- Time-saving insertion and removal of the lifting key (WK Quicklift)
- Non-detachable and visible type identification in the anchor head

Component recommendation

✓ Slab/panel ✓ Column/rod-shaped component ✓ Foundation

✓ Balcony ✓ Beam/girder/joist

WK Anchor short – black steel

Ref. no.	Type	Dimensions				Packing unit	Weight approx.	Price plus RTZ
		h [mm]	d_s [mm]	D [mm]	b [mm]	[pieces]	[kg/100 pcs]	[EUR/pcs]
118348	**WKK-BK-2.0**	145	14	26	26.5	100	22.00	**2.09**
118350	**WKK-BK-2.5**	190	14	26	26.5	100	27.00	**2.56**
118354	**WKK-BK-4.0**	230	20	36	44.0	25	66.00	**4.30**
118361	**WKK-BK-6.3**	270	25	47	39.5	10	128.00	**6.90**
118366	**WKK-BK-8.0**	300	28	47	52.0	10	159.00	**10.80**
118370	**WKK-BK-10.0**	325	28	47	52.0	1	174.00	**12.85**
118377	**WKK-BK-15.0**	400	36	70	73.0	1	380.00	**27.20**
118380	**WKK-BK-20.0**	500	40	70	71.0	1	540.00	**43.10**

CE

WK Bar Anchor

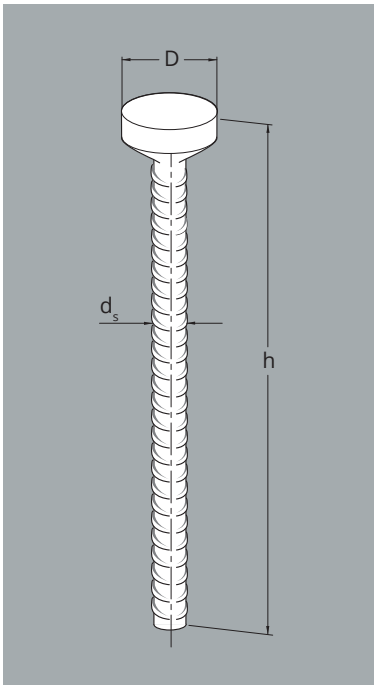

Use

- Spherical head lifting anchor with straight bar for lifting concrete elements
- Front-sided installation in the component
- To attach, place the anchor head in the slotted groove of the WK Quicklift as a lifting key.

Your advantages

- Long bond area allows for very narrow components
- Easy installation due to symmetrical shape
- All load directions possible
- Time-saving insertion and removal of the lifting key (WK Quicklift)
- Non-detachable and visible type identification in the anchor head

Component recommendation

✓ Precast wall

✓ Column/rod-shaped component

✓ Room module/garage

WK Bar Anchor – black steel

Ref. no.	Type	Dimensions			Packing unit	Weight approx.	Price plus RTZ
		h [mm]	d_s [mm]	D [mm]	[pieces]	[kg/100 pcs]	[EUR/pcs]
276024	**WKS-BK-2.0**	380	14	26	50	49.00	**4.20**
276028	**WKS-BK-2.5**	470	14	26	25	60.00	**4.30**
276029	**WKS-BK-4.0**	510	20	36	1	135.00	**9.45**
276030	**WKS-BK-5.0**	650	20	36	1	167.00	**9.90**
276031	**WKS-BK-6.3**	690	25	47	1	281.00	**18.15**
276032	**WKS-BK-8.0**	840	28	47	1	420.00	**18.90**
276033	**WKS-BK-10.0**	920	28	47	1	459.00	**23.10**
278567	**WKS-BK-15.0**	1200	36	70	1	1007.00	**46.80**
278568	**WKS-BK-20.0**	1400	40	70	1	1430.00	**65.40**

CE

WK Bar Anchor cropped

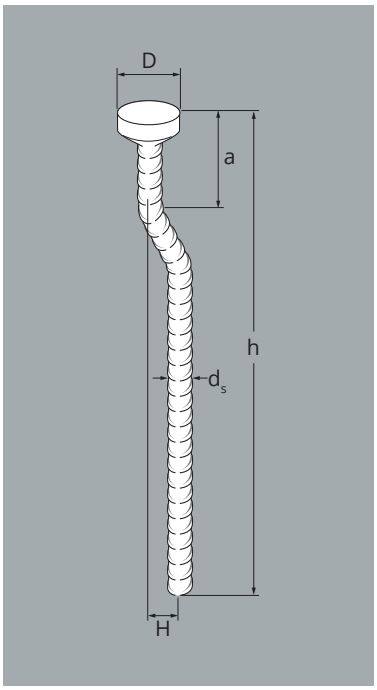

Use

- Spherical head lifting anchor with cropped bar for lifting three-layer sandwich panels
- Front-sided installation in the component
- To attach, place the anchor head in the slotted groove of the WK Quicklift as a lifting key.

Your advantages

- The load is attached exactly above the centre of gravity, so no tilting of the sandwich panels during lifting
- Long bond area allows for very narrow components
- Position of the anchor head also possible in the insulation
- Time-saving insertion and removal of the lifting key (WK Quicklift)
- Non-detachable and visible type identification in the anchor head

Component recommendation

✓ Sandwich wall

WK Bar Anchor cropped – black steel

Ref. no.	Type	Dimensions					Packing unit	Weight approx.	Price plus RTZ
		D [mm]	d_s [mm]	a [mm]	H [mm]	h [mm]	[pieces]	[kg/100 pcs]	[EUR/pcs]
284582	**WKG-BK-2.0**	26	14	140	100	690	1	89.40	**10.95**
284583	**WKG-BK-4.0**	36	20	140	120	855	1	225.64	**19.75**
284584	**WKG-BK-6.3**	47	25	140	120	1085	1	445.02	**24.20**
284585	**WKG-BK-8.0**	47	28	195	125	1185	1	599.42	**27.45**
284586	**WKG-BK-15.0**	70	36	235	140	1380	1	1178.50	**63.80**

CE

WK Quicklift

Use

- Robust lifting key for lifting concrete elements
- Can be used for centric pull, parallel and transverse shear pull
- Suspend the head of the embedded spherical head anchor over the slotted groove – attach the component to the lifting key

Your advantages

- Time-saving mounting and dismounting in the lifting anchor
- Lifting key for all DR and WK lifting anchor types
- Suitable for all load directions

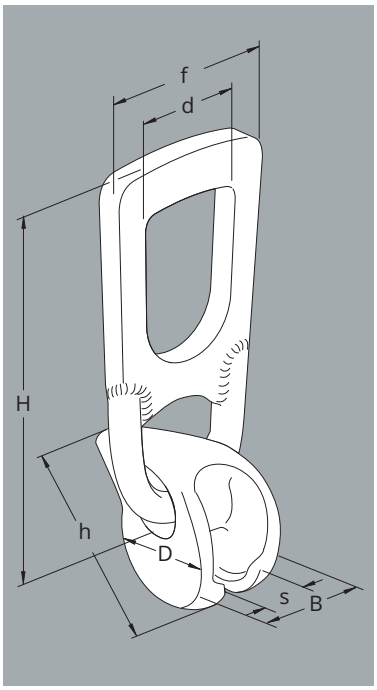

WK Quicklift – painted steel

Ref. no.	Type	For anchor size	Dimensions							Packing unit	Weight approx.	Price plus RTZ
			D [mm]	H [mm]	h [mm]	B [mm]	s [mm]	d [mm]	f [mm]	[pieces]	[kg/pcs]	[EUR/pcs]
175722	**WKQ-1.3**	WK/DR-1.3	54	162	74	33	11.5	46	74	1	0.90	**146.50**
175723	**WKQ-2.0**	WK/DR-2.5	63	194	89	42	16.0	55	86	1	1.48	**176.00**
175724	**WKQ-4.0**	WK/DR-5.0	82	236	112	60	21.5	70	118	1	3.24	**265.50**
175725	**WKQ-6.3**	WK/DR-10.0	105	339	155	84	29.0	84	160	1	10.40	**451.00**
273701	**WKQ-12.5**	WK/DR-20.0	153	441	231	115	41.0	118	186	1	24.00	**780.00**

CE

WK Moulding Insert

Use

- Positionally secure formwork installation of spherical head anchors
- Moulding inserts have a slot that allows the anchor head to be gripped when spread apart
- Version with threaded plate: can be mounted through a hole in the formwork using a separately available fixing screw
- Version with threaded stud: mounting through hole in the formwork possible via integrated threaded stud with wing nut

Your advantages

- Matching mould cavity for using the WK Quicklift as a lifting key
- Available for all anchor sizes of the spherical head anchor system
- Durable and reusable
- Rubber material – quick and easy to clean
- No penetration of concrete slurry due to sealing lips and accuracy of fit

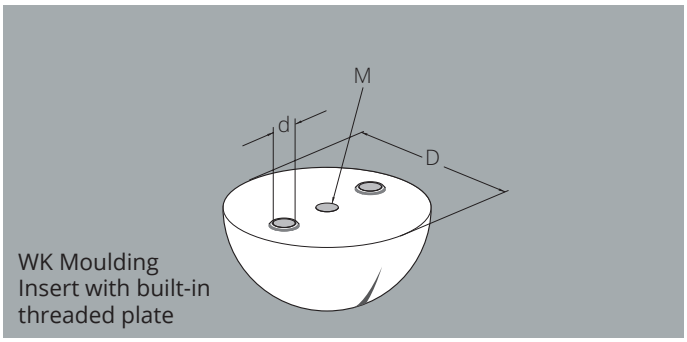

WK Moulding Insert with built-in threaded plate

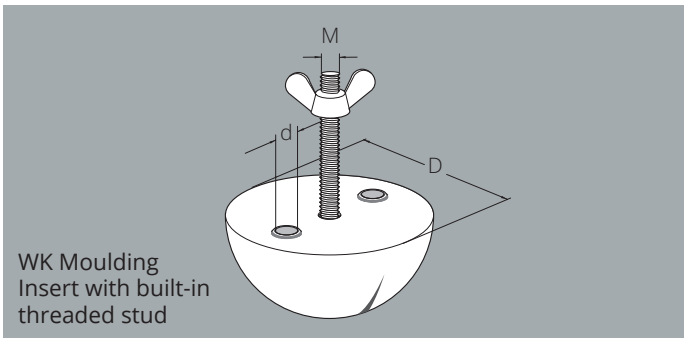

WK Moulding Insert with built-in threaded stud

WK Moulding Insert with built-in threaded plate – rubber

Ref. no.	Type	For anchor size	Thread size	Dimensions		Packing unit	Weight approx.	Price plus RTZ
				D [mm]	d [mm]	[pieces]	[kg/100 pcs]	[EUR/pcs]
118273	**WFP-1.3**	WK/DR-1.3	M 8	60	7	1	11.00	**9.30**
223693	**WFP-2.0**	WK/DR-2.0/2.5	M 10	76	7	1	15.00	**10.80**
223694	**WFP-4.0**	WK/DR-4.0/5.0	M 10	97	11	1	29.00	**14.65**
223695	**WFP-6.3**	WK/DR-6.3/7.5	M 10	121	11	1	51.00	**20.60**
223696	**WFP-8.0**	WK/DR-8.0/10.0	M 10	121	11	1	50.00	**20.60**
223697	**WFP-12.5**	WK/DR-12.5	M 10	165	11	1	120.00	**37.80**
223698	**WFP-15.0**	WK/DR-15.0	M 10	165	11	1	125.00	**38.90**
223699	**WFP-20.0**	WK/DR-20.0	M 10	165	11	1	132.00	**39.80**

WK Moulding Insert with built-in threaded stud – rubber

Ref. no.	Type	For anchor size	Thread size	Dimensions		Packing unit	Weight approx.	Price plus RTZ
				D [mm]	d [mm]	[pieces]	[kg/100 pcs]	[EUR/pcs]
118415	**WFS-1.3**	WK/DR-1.3	M 8	60	7	1	20.00	**9.70**
223700	**WFS-2.0**	WK/DR-2.0/2.5	M 10	76	7	1	25.00	**13.10**
223701	**WFS-4.0**	WK/DR-4.0/5.0	M 10	97	11	1	40.00	**18.60**
223702	**WFS-6.3**	WK/DR-6.3/7.5	M 10	121	11	1	61.00	**24.85**
223703	**WFS-8.0**	WK/DR-8.0/10.0	M 10	121	11	1	53.00	**24.85**
223704	**WFS-12.5**	WK/DR-12.5	M 10	165	11	1	130.00	**47.30**
223705	**WFS-15.0**	WK/DR-15.0	M 10	165	11	1	130.00	**48.50**
223706	**WFS-20.0**	WK/DR-20.0	M 10	165	11	1	130.00	**49.20**

Fixing Screw for spherical head anchor system

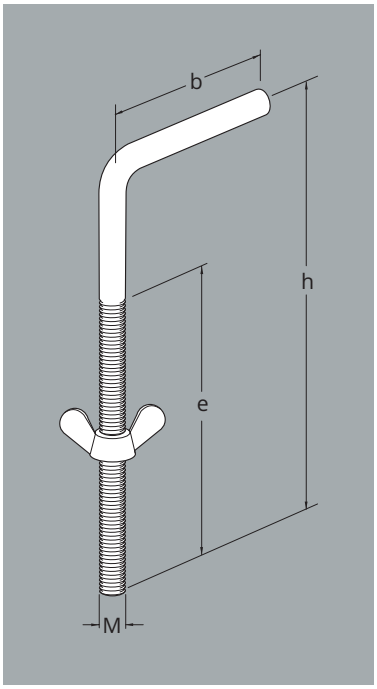

Use

- Connection of spherical head anchor with WK Moulding Insert through the formwork

Your advantages

- Easy to screw by hand via L-shape and wing nut
- Suitable for different formwork thicknesses
- Reusable

Fixing Screw – galvanized steel – for Fixing Bolts

Ref. no.	Type	For WK Moulding Insert	Thread size	Dimensions			Packing unit	Weight approx.	Price plus RTZ
				h [mm]	b [mm]	e [mm]	[pieces]	[kg/100 pcs]	[EUR/pcs]
118543	**FIX-ZN-8**	WFP/WFS-1.3	M 8	120	60	80	1	11.00	**4.50**
118544	**FIX-ZN-10**	WFP/WFS-2.0 – 20.0	M 10	150	60	110	1	12.62	**6.40**

Dimensioning tables – Spherical Head Anchor

WK Anchor long, WK Anchor short, WK Bar Anchor

The following table can be used to quickly select the required anchor size.
If the installation situation is different, the calculation method according to the general dimensioning principles for lifting anchors can be used for an individual anchor dimensioning.

	↓ Number of load bearing anchors „n“ ↓								
	n = 2			n = 3			n = 4		
Load angle →	β ≤ 10°	β ≤ 20°	β ≤ 30°	β ≤ 10°	β ≤ 20°	β ≤ 30°	β ≤ 10°	β ≤ 20°	β ≤ 30°
↓ Component weight [t] ↓	↓ Anchor size ↓								
1.0	WK-2.0	WK-2.0	WK-2.0	WK-2.0	WK-2.0	WK-2.0	WK-2.0	WK-2.0	WK-2.0
1.5	WK-2.0	WK-2.0	WK-2.0	WK-2.0	WK-2.0	WK-2.0	WK-2.0	WK-2.0	WK-2.0
2.0	WK-2.0	WK-2.0	WK-2.0	WK-2.0	WK-2.0	WK-2.0	WK-2.0	WK-2.0	WK-2.0
2.5	WK-2.0	WK-2.0	WK-2.0	WK-2.0	WK-2.0	WK-2.0	WK-2.0	WK-2.0	WK-2.0
3.0	WK-2.0	WK-2.5	WK-2.5	WK-2.0	WK-2.0	WK-2.0	WK-2.0	WK-2.0	WK-2.0
3.5	WK-2.5	WK-2.5	WK-4.0	WK-2.0	WK-2.0	WK-2.0	WK-2.0	WK-2.0	WK-2.0
4.0	WK-4.0	WK-4.0	WK-4.0	WK-2.0	WK-2.0	WK-2.5	WK-2.0	WK-2.0	WK-2.0
4.5	WK-4.0	WK-4.0	WK-4.0	WK-2.0	WK-2.5	WK-2.5	WK-2.0	WK-2.0	WK-2.0
5.0	WK-4.0	WK-4.0	WK-4.0	WK-2.5	WK-2.5	WK-4.0	WK-2.0	WK-2.0	WK-2.0
5.5	WK-4.0	WK-4.0	WK-5.0	WK-2.5	WK-4.0	WK-4.0	WK-2.0	WK-2.0	WK-2.5
6.0	WK-4.0	WK-5.0	WK-5.0	WK-4.0	WK-4.0	WK-4.0	WK-2.0	WK-2.5	WK-2.5
6.5	WK-5.0	WK-5.0	WK-5.0	WK-4.0	WK-4.0	WK-4.0	WK-2.5	WK-2.5	WK-2.5
7.0	WK-5.0	WK-5.0	WK-6.3	WK-4.0	WK-4.0	WK-4.0	WK-2.5	WK-2.5	WK-4.0
7.5	WK-5.0	WK-6.3	WK-6.3	WK-4.0	WK-4.0	WK-4.0	WK-2.5	WK-4.0	WK-4.0
8.0	WK-6.3	WK-6.3	WK-6.3	WK-4.0	WK-4.0	WK-5.0	WK-4.0	WK-4.0	WK-4.0
8.5	WK-6.3	WK-6.3	WK-8.0	WK-4.0	WK-4.0	WK-5.0	WK-4.0	WK-4.0	WK-4.0
9.0	WK-6.3	WK-6.3	WK-8.0	WK-4.0	WK-5.0	WK-5.0	WK-4.0	WK-4.0	WK-4.0
9.5	WK-6.3	WK-8.0	WK-8.0	WK-5.0	WK-5.0	WK-5.0	WK-4.0	WK-4.0	WK-4.0
10.0	WK-8.0	WK-8.0	WK-8.0	WK-5.0	WK-5.0	WK-6.3	WK-4.0	WK-4.0	WK-4.0
10.5	WK-8.0	WK-8.0	WK-8.0	WK-5.0	WK-5.0	WK-6.3	WK-4.0	WK-4.0	WK-4.0
11.0	WK-8.0	WK-8.0	WK-10.0	WK-5.0	WK-6.3	WK-6.3	WK-4.0	WK-4.0	WK-5.0
11.5	WK-8.0	WK-8.0	WK-10.0	WK-6.3	WK-6.3	WK-6.3	WK-4.0	WK-4.0	WK-5.0
12.0	WK-8.0	WK-10.0	WK-10.0	WK-6.3	WK-6.3	WK-6.3	WK-4.0	WK-5.0	WK-5.0
12.5	WK-10.0	WK-10.0	WK-10.0	WK-6.3	WK-6.3	WK-6.3	WK-5.0	WK-5.0	WK-5.0
13.0	WK-10.0	WK-10.0	WK-10.0	WK-6.3	WK-6.3	WK-8.0	WK-5.0	WK-5.0	WK-5.0
13.5	WK-10.0	WK-10.0	WK-15.0	WK-6.3	WK-6.3	WK-8.0	WK-5.0	WK-5.0	WK-6.3
14.0	WK-10.0	WK-10.0	WK-15.0	WK-6.3	WK-8.0	WK-8.0	WK-5.0	WK-5.0	WK-6.3
14.5	WK-10.0	WK-15.0	WK-15.0	WK-8.0	WK-8.0	WK-8.0	WK-5.0	WK-6.3	WK-6.3
15.0	WK-10.0	WK-15.0	WK-15.0	WK-8.0	WK-8.0	WK-8.0	WK-5.0	WK-6.3	WK-6.3
15.5	WK-15.0	WK-15.0	WK-15.0	WK-8.0	WK-8.0	WK-8.0	WK-6.3	WK-6.3	WK-6.3
16.0	WK-15.0	WK-15.0	WK-15.0	WK-8.0	WK-8.0	WK-10.0	WK-6.3	WK-6.3	WK-6.3
16.5	WK-15.0	WK-15.0	WK-15.0	WK-8.0	WK-8.0	WK-10.0	WK-6.3	WK-6.3	WK-6.3
17.0	WK-15.0	WK-15.0	WK-15.0	WK-8.0	WK-8.0	WK-10.0	WK-6.3	WK-6.3	WK-8.0
17.5	WK-15.0	WK-15.0	WK-15.0	WK-8.0	WK-10.0	WK-10.0	WK-6.3	WK-6.3	WK-8.0
18.0	WK-15.0	WK-15.0	WK-15.0	WK-8.0	WK-10.0	WK-10.0	WK-6.3	WK-6.3	WK-8.0
18.5	WK-15.0	WK-15.0	WK-15.0	WK-10.0	WK-10.0	WK-10.0	WK-6.3	WK-8.0	WK-8.0
19.0	WK-15.0	WK-15.0	WK-15.0	WK-10.0	WK-10.0	WK-10.0	WK-6.3	WK-8.0	WK-8.0
19.5	WK-15.0	WK-15.0	WK-15.0	WK-10.0	WK-10.0	WK-10.0	WK-8.0	WK-8.0	WK-8.0
20.0	WK-15.0	WK-15.0	WK-20.0	WK-10.0	WK-10.0	WK-15.0	WK-8.0	WK-8.0	WK-8.0

DR Anchor, DR Anchor with eye

	↓ Number of load bearing anchors „n“ ↓								
	n = 2			n = 3			n = 4		
Load angle →	β ≤ 10°	β ≤ 20°	β ≤ 30°	β ≤ 10°	β ≤ 20°	β ≤ 30°	β ≤ 10°	β ≤ 20°	β ≤ 30°
↓ Component weight [t] ↓	↓ Anchor size ↓								
1.0	DR-1.3	DR-1.3	DR-1.3	DR-1.3	DR-1.3	DR-1.3	DR-1.3	DR-1.3	DR-1.3
1.5	DR-1.3	DR-1.3	DR-1.3	DR-1.3	DR-1.3	DR-1.3	DR-1.3	DR-1.3	DR-1.3
2.0	DR-2.5	DR-2.5	DR-2.5	DR-1.3	DR-1.3	DR-1.3	DR-1.3	DR-1.3	DR-1.3
2.5	DR-2.5	DR-2.5	DR-2.5	DR-1.3	DR-1.3	DR-1.3	DR-1.3	DR-1.3	DR-1.3
3.0	DR-2.5	DR-2.5	DR-2.5	DR-2.5	DR-2.5	DR-2.5	DR-1.3	DR-1.3	DR-1.3
3.5	DR-2.5	DR-2.5	DR-5.0	DR-2.5	DR-2.5	DR-2.5	DR-1.3	DR-1.3	DR-2.5
4.0	DR-5.0	DR-5.0	DR-5.0	DR-2.5	DR-2.5	DR-2.5	DR-2.5	DR-2.5	DR-2.5
4.5	DR-5.0	DR-5.0	DR-5.0	DR-2.5	DR-2.5	DR-2.5	DR-2.5	DR-2.5	DR-2.5
5.0	DR-5.0	DR-5.0	DR-5.0	DR-2.5	DR-2.5	DR-5.0	DR-2.5	DR-2.5	DR-2.5
5.5	DR-5.0	DR-5.0	DR-5.0	DR-2.5	DR-5.0	DR-5.0	DR-2.5	DR-2.5	DR-2.5
6.0	DR-5.0	DR-5.0	DR-5.0	DR-5.0	DR-5.0	DR-5.0	DR-2.5	DR-2.5	DR-2.5
6.5	DR-5.0	DR-5.0	DR-5.0	DR-5.0	DR-5.0	DR-5.0	DR-2.5	DR-2.5	DR-2.5
7.0	DR-5.0	DR-5.0	DR-7.5	DR-5.0	DR-5.0	DR-5.0	DR-2.5	DR-2.5	DR-5.0
7.5	DR-5.0	DR-7.5	DR-7.5	DR-5.0	DR-5.0	DR-5.0	DR-2.5	DR-5.0	DR-5.0
8.0	DR-7.5	DR-7.5	DR-7.5	DR-5.0	DR-5.0	DR-5.0	DR-5.0	DR-5.0	DR-5.0
8.5	DR-7.5	DR-7.5	DR-7.5	DR-5.0	DR-5.0	DR-5.0	DR-5.0	DR-5.0	DR-5.0
9.0	DR-7.5	DR-7.5	DR-7.5	DR-5.0	DR-5.0	DR-5.0	DR-5.0	DR-5.0	DR-5.0
9.5	DR-7.5	DR-7.5	DR-7.5	DR-5.0	DR-5.0	DR-5.0	DR-5.0	DR-5.0	DR-5.0
10.0	DR-7.5	DR-7.5	DR-10.0	DR-5.0	DR-5.0	DR-7.5	DR-5.0	DR-5.0	DR-5.0
10.5	DR-7.5	DR-7.5	DR-10.0	DR-5.0	DR-5.0	DR-7.5	DR-5.0	DR-5.0	DR-5.0
11.0	DR-7.5	DR-10.0	DR-10.0	DR-5.0	DR-7.5	DR-7.5	DR-5.0	DR-5.0	DR-5.0
11.5	DR-10.0	DR-10.0	DR-10.0	DR-7.5	DR-7.5	DR-7.5	DR-5.0	DR-5.0	DR-5.0
12.0	DR-10.0	DR-10.0	DR-10.0	DR-7.5	DR-7.5	DR-7.5	DR-5.0	DR-5.0	DR-5.0
12.5	DR-10.0	DR-10.0	DR-10.0	DR-7.5	DR-7.5	DR-7.5	DR-5.0	DR-5.0	DR-5.0
13.0	DR-10.0	DR-10.0	DR-10.0	DR-7.5	DR-7.5	DR-7.5	DR-5.0	DR-5.0	DR-5.0
13.5	DR-10.0	DR-10.0	DR-15.0	DR-7.5	DR-7.5	DR-7.5	DR-5.0	DR-5.0	DR-7.5
14.0	DR-10.0	DR-10.0	DR-15.0	DR-7.5	DR-7.5	DR-7.5	DR-5.0	DR-5.0	DR-7.5
14.5	DR-10.0	DR-15.0	DR-15.0	DR-7.5	DR-7.5	DR-7.5	DR-5.0	DR-7.5	DR-7.5
15.0	DR-10.0	DR-15.0	DR-15.0	DR-7.5	DR-7.5	DR-10.0	DR-5.0	DR-7.5	DR-7.5
15.5	DR-15.0	DR-15.0	DR-15.0	DR-7.5	DR-7.5	DR-10.0	DR-7.5	DR-7.5	DR-7.5
16.0	DR-15.0	DR-15.0	DR-15.0	DR-7.5	DR-7.5	DR-10.0	DR-7.5	DR-7.5	DR-7.5
16.5	DR-15.0	DR-15.0	DR-15.0	DR-7.5	DR-10.0	DR-10.0	DR-7.5	DR-7.5	DR-7.5
17.0	DR-15.0	DR-15.0	DR-15.0	DR-7.5	DR-10.0	DR-10.0	DR-7.5	DR-7.5	DR-7.5
17.5	DR-15.0	DR-15.0	DR-15.0	DR-10.0	DR-10.0	DR-10.0	DR-7.5	DR-7.5	DR-7.5
18.0	DR-15.0	DR-15.0	DR-15.0	DR-10.0	DR-10.0	DR-10.0	DR-7.5	DR-7.5	DR-7.5
18.5	DR-15.0	DR-15.0	DR-15.0	DR-10.0	DR-10.0	DR-10.0	DR-7.5	DR-7.5	DR-7.5
19.0	DR-15.0	DR-15.0	DR-15.0	DR-10.0	DR-10.0	DR-10.0	DR-7.5	DR-7.5	DR-7.5
19.5	DR-15.0	DR-15.0	DR-15.0	DR-10.0	DR-10.0	DR-10.0	DR-7.5	DR-7.5	DR-7.5
20.0	DR-15.0	DR-15.0	DR-20.0	DR-10.0	DR-10.0	DR-15.0	DR-7.5	DR-7.5	DR-10.0

Basics

- Technical guideline VDI/BV-BS 6205 in interpretation of directive 2006/42/EC (machinery directive)
- Concrete strength from $f_{c,cube}$ = 15 N/mm²
- Symmetrical installation of the anchors in the centre of mass
- Lifting with portal or mobile crane:
- dynamic factor ψ_{dyn} = 1.3
- Observe the minimum degree of reinforcement of the component according to the technical information for the respective anchors
- In case of parallel shear pull, observe additional reinforcement according to the technical information of the respective anchors
- If necessary, retention reinforcement n the anchor is required (depending on the selected anchor type)
- Observe minimum dimensions and distances according to the technical information for the respective anchors
- Number of load bearing anchors “n”, see examples below:

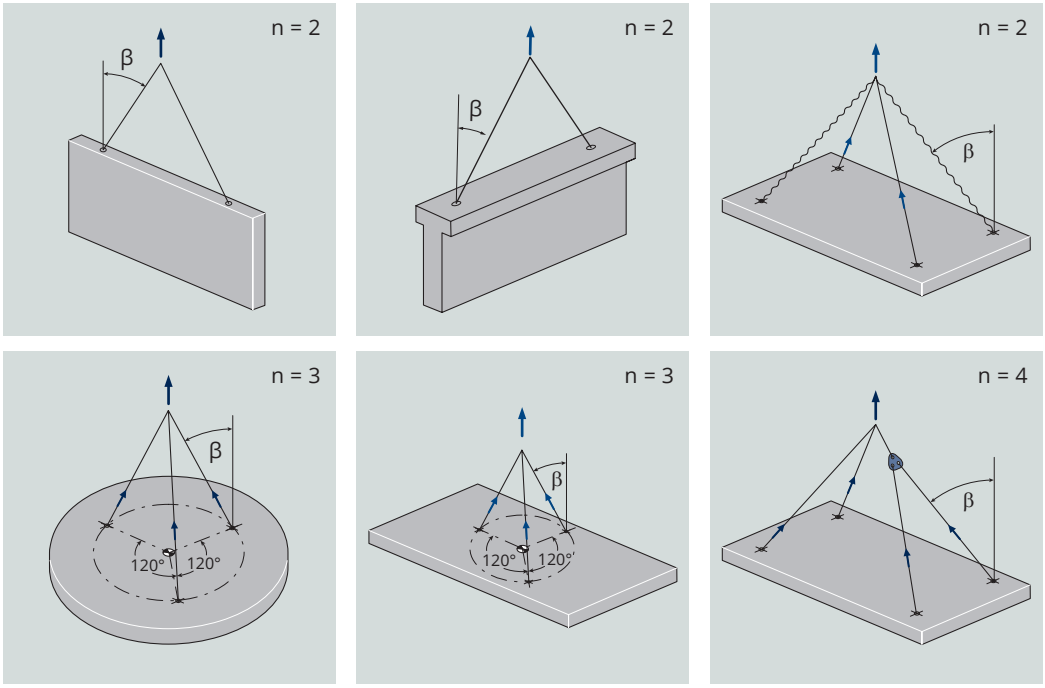

Wire rope loop anchor system

The wire rope loop anchor is the ideal solution for cost-effective lifting of heavy loads. Embedded in concrete, the wire rope loop of the anchors protrudes from the component allowing the anchor to be attached to the crane hook. Wire rope loop anchors are suitable for a wide variety of components.

Your advantages

- Working load limits from 8 kN (0.8 t) to 990 kN (99 t)
- Ideal for heavily reinforced structural elements
- Economical due to quick attachment
- Clear labelling for safety

More information can be found at
www.pfeifer.info/
wire-rope-loop-anchor-system

Wire rope loop anchor system

Anchor

BS Anchor 90
Bent Loop 91

Lifting Key

BS Hook 92
BS Capstan Ring 93

Accesories

BS Moulding Insert 94
Fixing Screw for wire rope loop anchor system 95

Technical information

Dimensioning table – Wire Rope Loop Anchor . . 96

BS Anchor

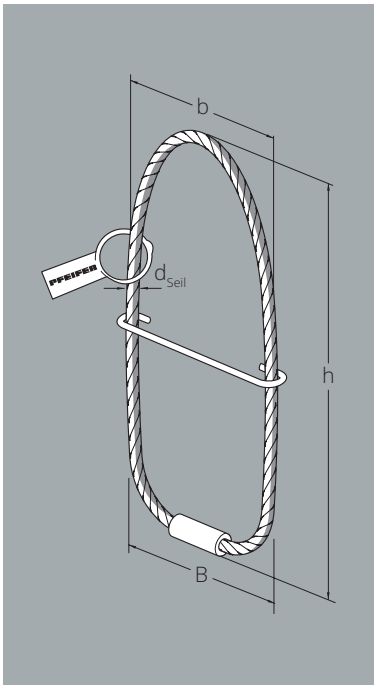

Use

- Wire rope loop lifting anchor for lifting concrete elements
- Frontal or top-sided installation in the component
- Part of the loop protrudes from the component when installed and can be cut off after use
- Direct attachment by crane hook possible
- Use the corresponding BS Hook for fastening the recessed component
- Use a suitable BS Capstan Ring for an optimal deflection radius of the rope

Your advantages

- Easy installation without fixing accessories
- High working load limits (depending on the component geometry)
- Special solutions for very high component weights
- Clear type identification by colour-coded identification ring
- Cost-effective lifting anchor solution

Component recommendation

✓ Precast wall ✓ Column/rod-shaped component ✓ Slab/panel

✓ TT slabs ✓ Foundation ✓ Beam/girder/joist

BS Anchor – Galvanized Steel Cable

Ref. no.	Type	Colour coding Load capacity identification tag	Dimensions h [mm]	B [mm]	b [mm]	d_{Seil} [1] [mm]	Load carrier [pieces]	Packing unit [pieces]	Weight approx. [kg/pcs]	Price plus RTZ [EUR/pcs]
117669	BS-ZN-0.8	Pure white	205	95	85	6	3000	50	0.08	**2.10**
117675	BS-ZN-1.2	Flame red	230	100	90	7	2500	50	0.12	**2.56**
117685	BS-ZN-1.6	Light pink	250	130	125	8	2000	25	0.17	**2.61**
117693	BS-ZN-2.0	Pastel green	300	135	125	9	1500	20	0.27	**3.50**
117702	BS-ZN-2.5	Anthracite grey	325	140	125	10	1200	20	0.30	**3.60**
355003	BS-ZN-4.0	Emerald green	370	165	145	13	600	10	0.50	**5.20**
117731	BS-ZN-5.2	Curryyellow	380	180	145	14	500	10	0.73	**7.30**
117740	BS-ZN-6.3	Light blue	425	235	200	16	300	1	1.10	**10.15**
117751	BS-ZN-8.0	Silver grey	480	235	235	18	200	1	1.60	**14.10**
117759	BS-ZN-10.0	Bordeauxviolett	535	260	235	20	150	1	2.10	**20.95**
117767	BS-ZN-12.5	Sulphur yellow	590	280	245	22	130	1	2.72	**25.90**
117778	BS-ZN-16.0	blue purple	670	325	300	26	80	1	4.50	**39.20**
117786	BS-ZN-20.0	yellow gray	750	380	345	28	50	1	5.90	**57.60**
117793	BS-ZN-25.0	clay brown	850	400	380	32	40	1	8.40	**72.00**
117798	BS-ZN-28.0	universal silver	680	360	262	32	50	1	8.03	**111.00**
117805	BS-ZN-32.0	universal silver	770	400	332	36	40	1	10.04	**113.00**
117811	BS-ZN-37.0	universal silver	950	440	380	36	30	1	12.70	**149.00**
117816	BS-ZN-42.0	universal silver	1000	480	418	40	25	1	14.00	**243.50**
117822	BS-ZN-47.0	universal silver	1100	520	438	44	20	1	21.20	**264.00**
117827	BS-ZN-52.0	universal silver	1200	520	456	44	10	1	23.00	**313.00**
117833	BS-ZN-57.0	universal silver	1350	600	500	48	10	1	30.75	**333.00**
135160	BS-ZN-65.0	universal silver	1450	690	600	46	10	1	36.01	**395.00**
135161	BS-ZN-75.0	universal silver	1530	760	700	50	10	1	46.02	**485.00**
135162	BS-ZN-85.0	universal silver	1680	850	760	52	10	1	55.06	**520.00**
135163	BS-ZN-99.0	universal silver	1800	900	800	56	10	1	67.58	**on request**

[1] The indicated rope diameters are guide values which may vary depending on the rope construction
[2] CE certification applies to sizes 0.8-32.0 and 65.0

CE [2]

Bent Loop

Use

- Angled wire rope loop lifting anchor for lifting thin concrete elements
- Top-sided installation in the component
- Direct attachment by crane hook possible
- Use a suitable BS Capstan Ring for an optimal deflection radius of the rope

Your advantages

- Safe load application for thin components
- Easy installation due to flexible shape
- Secure attachment to the reinforcement
- No additional reinforcement required

Component recommendation

✓ L-shaped wall ✓ Slab/panel

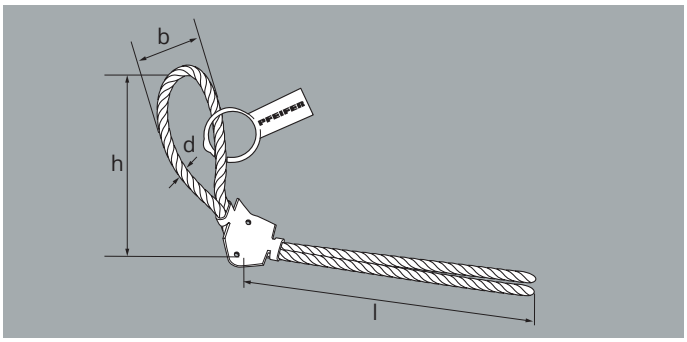

Bent Loop – galvanized steel rope

Ref. no.	Type	Dimensions				Load carrier	Packing unit	Weight approx.	Price plus RTZ
		h [mm]	b [mm]	d [mm]	l [mm]	[pieces]	[pieces]	[kg/100 pcs]	[EUR/pcs]
280531	**WS-ZN-0.8**	205	85	6	280	500	500	20.00	**2.85**
280532	**WS-ZN-1.6**	205	85	8	280	350	350	33.00	**3.35**
280533	**WS-ZN-2.4**	285	120	10	280	250	250	45.00	**4.20**
313883	**WS-ZN-4.0**	290	140	13	320	400	400	94.00	**6.05**
313884	**WS-ZN-5.2**	320	150	14	320	250	250	113.00	**7.60**

CE

BS Hook

Use

- Lifting key for BS Anchor for recessed installation
- Simply hook into the wire rope loop protruding from the component, attach the BS Hook with the crane hook

Your advantages

- Attachment of BS Anchors also possible with recessed installation
- Gradual shaping of the hook mouth for the wire rope
- Held captively by spring-loaded locking pin

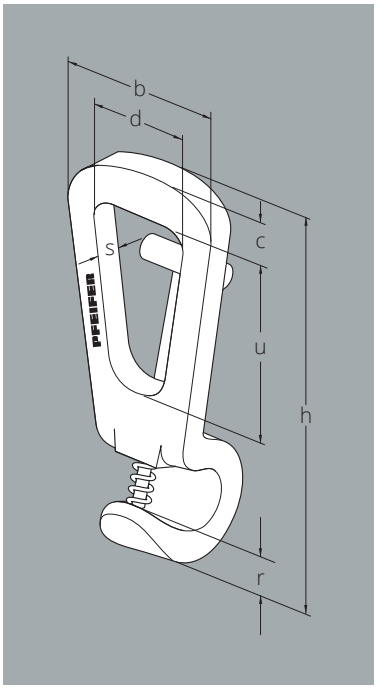

BS Hook – painted steel

Ref. no.	Type	Colour coding	For anchor size	Dimensions							Packing unit	Weight approx.	Price plus RTZ
				h [mm]	b [mm]	c [mm]	d [mm]	r [mm]	s [mm]	u [mm]	[pieces]	[kg/pcs]	[EUR/pcs]
118149	**BSH-2.0**	Pastel green	BS-2.0	155	74	22	42	15	12	65	1	0.90	**146.00**
118155	**BSH-4.0**	Emerald green	BS-4.0	200	90	30	50	20	15	80	1	1.80	**164.00**
118160	**BSH-6.3**	Light blue	BS-6.3	260	120	37	65	25	20	110	1	3.20	**203.50**
118166	**BSH-10.0**	Bordeauxviolett	BS-10.0	320	140	45	80	32	25	145	1	6.40	**298.00**
118171	**BSH-16.0**	Blue purple	BS-16.0	370	190	60	100	37	30	160	1	11.00	**554.00**
118176	**BSH-25.0**	Clay brown	BS-25.0	470	240	82	140	53	35	193	1	23.00	**874.00**

BS Capstan Ring

Use

- For the gentle deflection of the rope of wire rope loop lifting anchors when attaching
- Simply thread the BS Capstan Ring into the wire rope loop protruding from the component and hang it on the crane hook using a shackle and bolt

Your advantages

- Attaching BS Anchors for maximum resistance
- Reusable

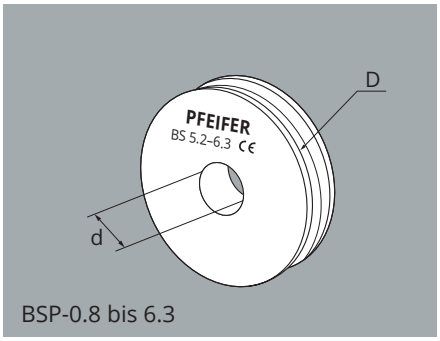

BSP-0.8 bis 6.3

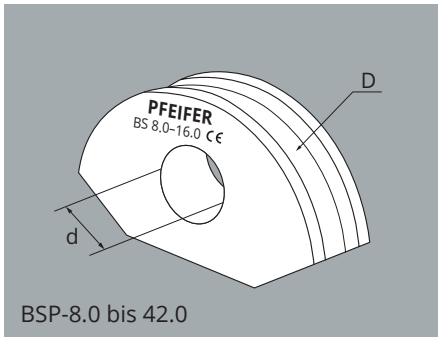

BSP-8.0 bis 42.0

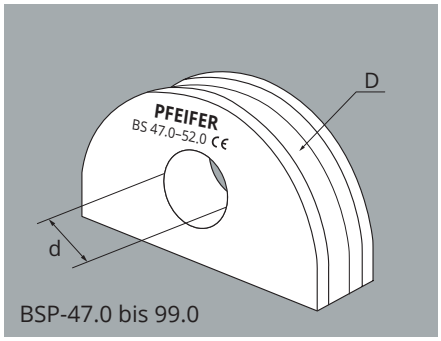

BSP-47.0 bis 99.0

BS Capstan Ring – black steel

Ref. no.	Type	Thread size	Dimensions		Packing unit	Weight approx.	Price plus RTZ
			D [mm]	d [mm]	[pieces]	[kg/pcs]	[EUR/pcs]
393615	**BSP-0.8-1.6**	BS-ZN-0.8-1.6	48	18	1	0.28	**on request**
393616	**BSP-2.0-4.0**	BS-ZN-2.0-4.0	78	25	1	1.03	**on request**
393617	**BSP-5.2-6.3**	BS-ZN-5.2-6.3	96	28	1	1.90	**on request**
393618	**BSP-8.0-16.0**	BS-ZN-8.0-16.0	156	45	1	4.12	**on request**
279631	**BSP-20.0-28.0**	BS-ZN-20.0-28.0	192	65	1	6.88	**on request**
279632	**BSP-32.0-42.0**	BS-ZN-32.0-42.0	240	72	1	13.75	**on request**
279633	**BSP-47.0-52.0**	BS-ZN-47.0-52.0	264	77	1	24.78	**on request**
279634	**BSP-57.0-65.0**	BS-ZN-57.0-65.0	300	100	1	42.87	**on request**
279635	**BSP-75.0-85.0**	BS-ZN-75.0-85.0	336	100	1	56.29	**on request**
393619	**BSP-99.0**	BS-ZN-99.0	360	110	1	72.32	**on request**

BS Moulding Insert

Use

- For formwork fixing of BS Anchors for recessed installation

Your advantages

- Recessed anchor installation and guaranteed concrete cover
- Durable and reusable
- Rubber material – quick and easy to clean
- No penetration of concrete slurry due to sealing lips and accuracy of fit

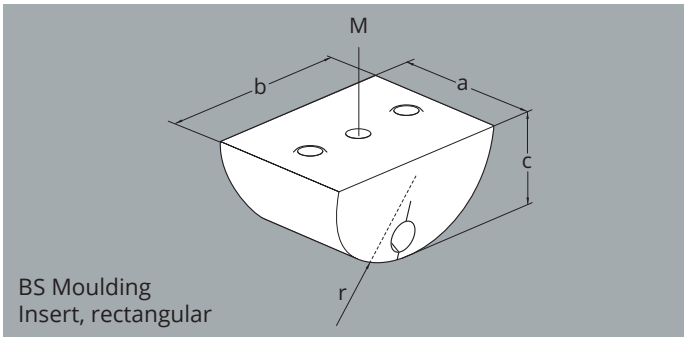

BS Moulding Insert, rectangular

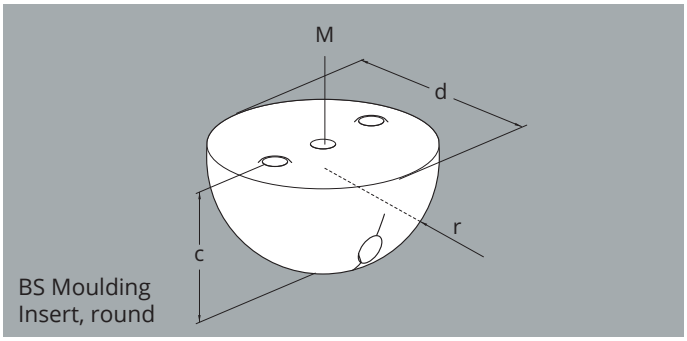

BS Moulding Insert, round

BS Moulding Insert. rectangular – rubber

Ref. no.	Type	For anchor size	Thread size	Dimensions				Packing unit	Weight approx.	Price plus RTZ
				a [mm]	b [mm]	c [mm]	r [mm]	[pieces]	[kg/100 pcs]	[EUR/pcs]
118548	**BSK-2.0**	**BS-2.0**	M 10	58	85	50	40.0	1	20.00	**19.15**
118550	**BSK-4.0**	**BS-4.0**	M 10	70	105	60	50.0	1	30.00	**24.40**
118553	**BSK-6.3**	**BS-6.3**	M 10	86	126	70	60.0	1	50.00	**44.60**

BS Moulding Insert. round – rubber

Ref. no.	Type	For anchor size	Thread size	Dimensions			Packing unit	Weight approx.	Price plus RTZ
				c [mm]	d [mm]	r [mm]	[pieces]	[kg/100 pcs]	[EUR/pcs]
118556	**BSK-10.0**	**BS-10.0**	M 10	75	149.0	72.5	1	99.00	**58.70**
118559	**BSK-16.0**	**BS-16.0**	M 10	85	169.0	82.5	1	120.00	**59.80**
118561	**BSK-25.0**	**BS-25.0**	M 10	108	214.0	105.0	1	250.00	**105.50**

Fixing Screw for wire rope loop anchor system

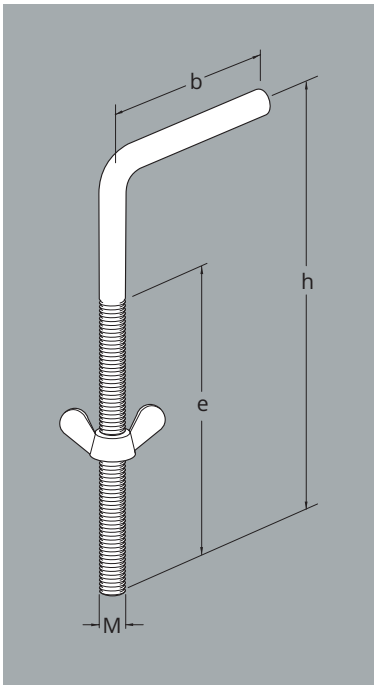

Use

- Connection of BS Anchor with BS Moulding Insert through the formwork

Your advantages

- Easy to screw by hand via L-shape and wing nut
- Suitable for different formwork thicknesses
- Reusable

Fixing Bolt – galvanized steel – for BS Moulding Insert

Ref. no.	Type	For BS Moulding Insert	Thread size	Dimensions			Packing unit	Weight approx.	Price plus RTZ
				h [mm]	b [mm]	e [mm]	[pieces]	[kg/100 pcs]	[EUR/pcs]
118544	**FIX-ZN-10**	BSK-2.0–25.0	M 10	150	60	110	1	12.62	**6.40**

Dimensioning table – Wire Rope Loop Anchor

BS Anchor

The following table can be used to quickly select the required anchor size.
If the installation situation is different, the calculation method according to the general dimensioning principles for lifting anchors can be used for an individual anchor dimensioning.

	↓ Number of load bearing anchors „n“ ↓					
	n = 2		n = 3		n = 4	
Load angle →	β ≤ 15°	β ≤ 30°	β ≤ 15°	β ≤ 30°	β ≤ 15°	β ≤ 30°
↓ Component weight [t]↓	↓ Anchor size ↓					
1.0	BS-0.8	BS-0.8	BS-0.8	BS-0.8	BS-0.8	BS-0.8
1.5	BS-1.2	BS-1.2	BS-0.8	BS-0.8	BS-0.8	BS-0.8
2.0	BS-1.6	BS-1.6	BS-1.2	BS-1.2	BS-0.8	BS-0.8
2.5	BS-2.0	BS-2.0	BS-1.2	BS-1.6	BS-1.2	BS-1.2
3.0	BS-2.5	BS-2.5	BS-1.6	BS-1.6	BS-1.2	BS-1.2
3.5	BS-2.5	BS-4.0	BS-1.6	BS-2.0	BS-1.2	BS-1.6
4.0	BS-4.0	BS-4.0	BS-2.0	BS-2.5	BS-1.6	BS-1.6
4.5	BS-4.0	BS-4.0	BS-2.5	BS-2.5	BS-1.6	BS-2.0
5.0	BS-4.0	BS-4.0	BS-2.5	BS-4.0	BS-2.0	BS-2.0
5.5	BS-4.0	BS-5.2	BS-2.5	BS-4.0	BS-2.0	BS-2.5
6.0	BS-5.2	BS-5.2	BS-4.0	BS-4.0	BS-2.5	BS-2.5
6.5	BS-5.2	BS-5.2	BS-4.0	BS-4.0	BS-2.5	BS-2.5
7.0	BS-5.2	BS-6.3	BS-4.0	BS-4.0	BS-2.5	BS-4.0
7.5	BS-5.2	BS-6.3	BS-4.0	BS-4.0	BS-4.0	BS-4.0
8.0	BS-6.3	BS-6.3	BS-4.0	BS-5.2	BS-4.0	BS-4.0
8.5	BS-6.3	BS-8.0	BS-4.0	BS-5.2	BS-4.0	BS-4.0
9.0	BS-6.3	BS-8.0	BS-5.2	BS-5.2	BS-4.0	BS-4.0
9.5	BS-8.0	BS-8.0	BS-5.2	BS-5.2	BS-4.0	BS-4.0
10.0	BS-8.0	BS-8.0	BS-5.2	BS-5.2	BS-4.0	BS-4.0
10.5	BS-8.0	BS-8.0	BS-5.2	BS-6.3	BS-4.0	BS-4.0
11.0	BS-8.0	BS-10.0	BS-5.2	BS-6.3	BS-4.0	BS-5.2
11.5	BS-8.0	BS-10.0	BS-5.2	BS-6.3	BS-4.0	BS-5.2
12.0	BS-10.0	BS-10.0	BS-6.3	BS-6.3	BS-5.2	BS-5.2
12.5	BS-10.0	BS-10.0	BS-6.3	BS-6.3	BS-5.2	BS-5.2
13.0	BS-10.0	BS-10.0	BS-6.3	BS-8.0	BS-5.2	BS-5.2
13.5	BS-10.0	BS-12.5	BS-6.3	BS-8.0	BS-5.2	BS-5.2
14.0	BS-10.0	BS-12.5	BS-6.3	BS-8.0	BS-5.2	BS-6.3
14.5	BS-10.0	BS-12.5	BS-8.0	BS-8.0	BS-5.2	BS-6.3
15.0	BS-12.5	BS-12.5	BS-8.0	BS-8.0	BS-5.2	BS-6.3
15.5	BS-12.5	BS-12.5	BS-8.0	BS-8.0	BS-6.3	BS-6.3
16.0	BS-12.5	BS-12.5	BS-8.0	BS-10.0	BS-6.3	BS-6.3
16.5	BS-12.5	BS-12.5	BS-8.0	BS-10.0	BS-6.3	BS-6.3
17.0	BS-12.5	BS-16.0	BS-8.0	BS-10.0	BS-6.3	BS-8.0
17.5	BS-12.5	BS-16.0	BS-8.0	BS-10.0	BS-6.3	BS-8.0
18.0	BS-12.5	BS-16.0	BS-10.0	BS-10.0	BS-6.3	BS-8.0
18.5	BS-12.5	BS-16.0	BS-10.0	BS-10.0	BS-6.3	BS-8.0
19.0	BS-16.0	BS-16.0	BS-10.0	BS-10.0	BS-8.0	BS-8.0
19.5	BS-16.0	BS-16.0	BS-10.0	BS-10.0	BS-8.0	BS-8.0
20.0	BS-16.0	BS-16.0	BS-10.0	BS-12.5	BS-8.0	BS-8.0

Basics

- Technical guideline VDI/BV-BS 6205 in interpretation of directive 2006/42/EC (machinery directive)
- Concrete strength from $f_{c,cube}$ = 15 N/mm²
- Symmetrical installation of the anchors in the centre of mass
- Lifting with portal or mobile crane:
- dynamic factor ψ_{dyn} = 1.3
- Observe the minimum degree of reinforcement of the component according to the technical information for the anchor
- Observe minimum dimensions and distances according to the technical information for the anchor
- Number of load bearing anchors “n”, see examples below:

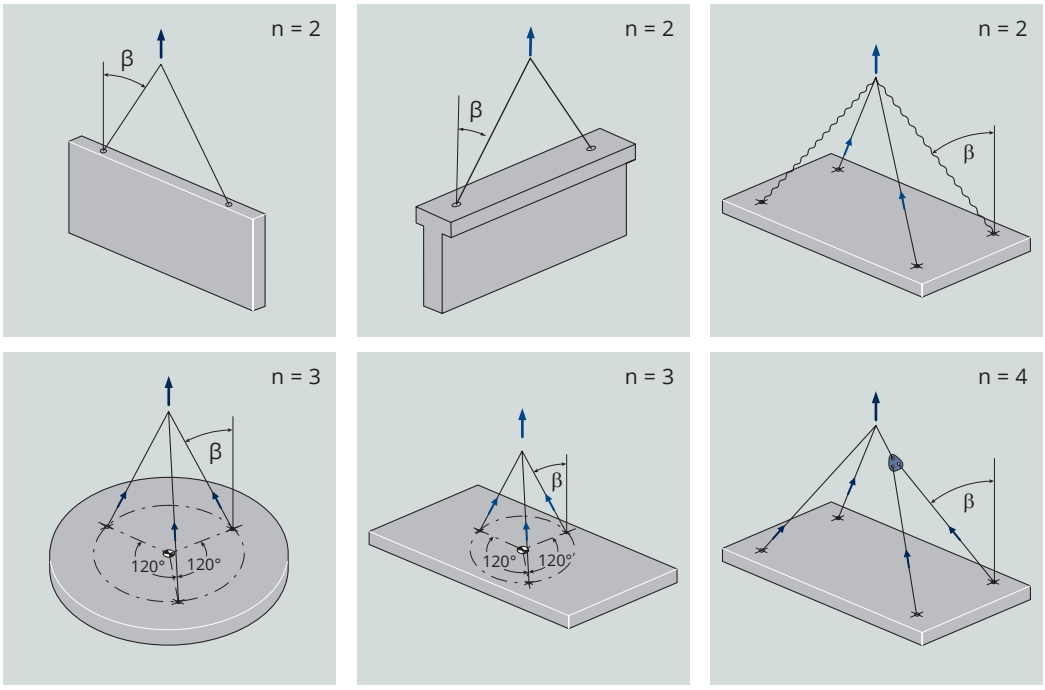

Light-Weight Concrete Anchor

The light-weight concrete anchors were specially developed for lifting precast elements made of light-weight aggregate concrete such as wall panels.
The anchors are arranged in the middle third of the wall thickness and, according to DIN 4032, do not require corrosion protection.

Brickwork Anchor

The Brickwork Anchors were specially developed for lifting prefabricated masonry panels.
After completion of the brick element, the anchors are inserted through the cavities in the bricks and then grouted with mortar.

Your advantages

- Anchor systems for special applications
- Versions with integrated lifting key available

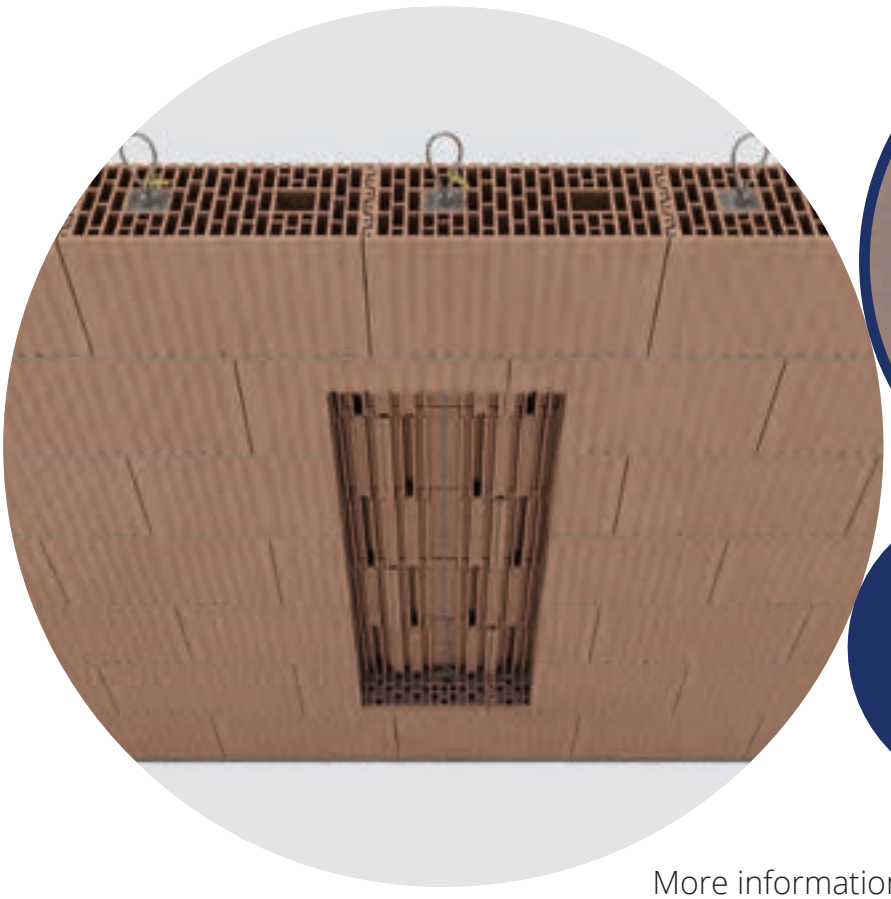

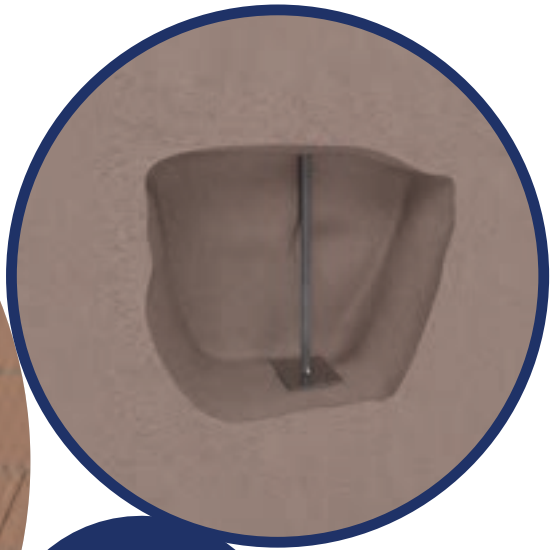

More information can be found at
www.pfeifer.info/special anchor

Light-Weight Concrete Anchor/ Brickwork Anchor

Anchor

LB anchor and lifting loop 100
Brickwork Anchor 101

LB anchor and lifting loop

Use

- Transport of precast elements made of porous lightweight concrete according to DIN 4232 where $f_{c,cube} \geq 2.5$ N/mm²
- Transport of non-reinforced wall panels with the 2280 mm-long version
- Lifting of single-layer reinforced wall panels with the 1000 mm short version
- Front-sided installation
- Straight pull
- Combinable with lifting loops from the threaded anchor system as lifting keys

Your advantages

- High carrying capacity due to load application by means of anchor plate
- The required anchor length is shortened with reinforced components

Component recommendation

✓ Light-weight concrete wall

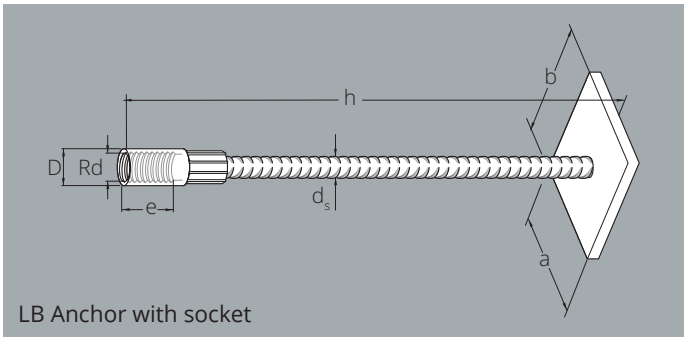

LB Anchor with socket

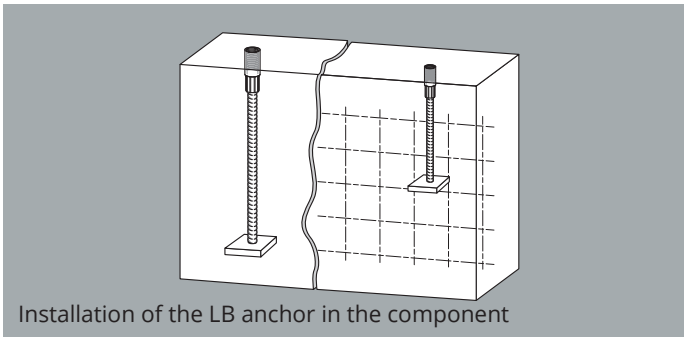
Installation of the LB anchor in the component

LB Anchor – with socket – galvanized steel socket

Ref. no.	Type	Thread size	Dimensions						Packing unit	Weight approx.	Price plus RTZ
			h [mm]	D [mm]	a [mm]	b [mm]	d_s [mm]	e [mm]	[pieces]	[kg/100 pcs]	[EUR/pcs]
117293	**LBH-18–1000**	Rd 18	1000	24.0	100	80	12	32	1	190.00	**9.80**
117296	**LBH-20–1000**	Rd 20	1000	27.2	100	100	12	32	1	240.00	**11.50**
117301	**LBH-30–1000**	Rd 30	1000	40.0	150	100	20	50	1	600.00	**22.70**
117294	**LBH-18–2280**	Rd 18	2280	24.0	100	80	12	32	1	310.00	**12.30**
117297	**LBH-20–2280**	Rd 20	2280	27.2	100	100	12	35	1	360.00	**14.15**
117302	**LBH-30–2280**	Rd 30	2280	40.0	150	100	20	50	1	920.00	**27.90**

Lifting Loop – steel rope – for lifting concrete elements

Ref. no.	Type	Colour coding Load capacity identification tag	Thread size	Dimensions			Packing unit	Weight approx.	Price plus RTZ
				e [mm]	h [mm]	l [mm]	[pieces]	[kg/100 pcs]	[EUR/pcs]
117922	**SOE-18**	Light pink	Rd 18	29	190	40	25	16.60	**18.00**
117924	**SOE-20**	Pastel green	Rd 20	33	215	45	25	24.00	**21.15**
117933	**SOE-30**	Emerald green	Rd 30	56	300	68	10	73.00	**38.20**

CE

Brickwork Anchor

Use

- Transport of prefabricated brickwork panels and brick walls
- Insertion of the anchor into the cavities of the bricks and grouting with mortar of strength grade IIa or higher in accordance with DIN 1053 T1
- Integrated wire rope loop enables simple attachment of the component

Your advantages

- Integrated lifting key
- Direct attachment with chain hook of the balancing spreader beam possible

Component recommendation

✓ Masonry wall

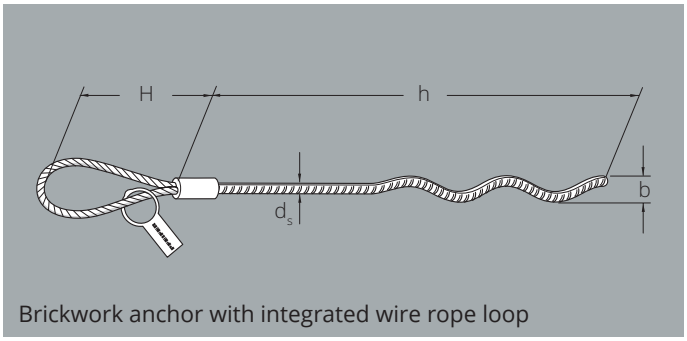

Brickwork anchor with integrated wire rope loop

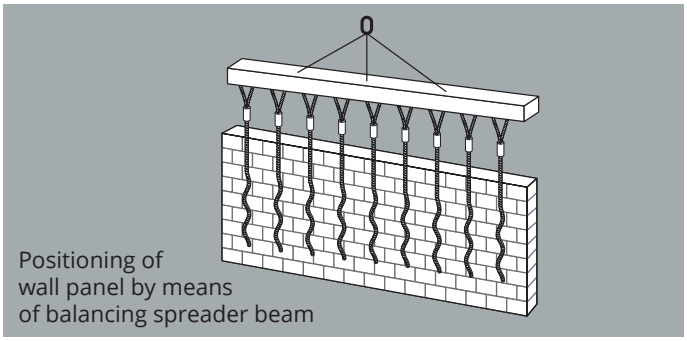
Positioning of wall panel by means of balancing spreader beam

Brickwork Anchor – galvanized steel socket

Ref. no.	Type	Dimensions				Packing unit	Weight approx.	Price plus RTZ
		H [mm]	h [mm]	b [mm]	d_s [mm]	[pieces]	[kg/100 pcs]	[EUR/pcs]
117345	**MW-0.94–1500**	130	1500	40	8	1	69.00	**5.05**
117347	**MW-0.94–2500**	130	2500	40	8	1	132.00	**5.45**
117368	**MW-1.45–2500**	120	2500	40	10	1	170.00	**7.70**
117376	**MW-1.45–2750**	120	2750	40	10	1	187.00	**8.10**
117379	**MW-1.45–3000**	120	3000	40	10	1	204.00	**8.35**
117389	**MW-2.10–3500**	115	2500	40	12	1	240.00	**9.75**
117394	**MW-2.10–2750**	115	2750	40	12	1	262.00	**10.00**
117397	**MW-2.10–3000**	115	3000	40	12	1	284.00	**10.80**

Transporting

Lashing anchor system p. 106

The lashing anchor system was specially developed as an attachment point for securing the position of concrete elements when transporting them by truck in road traffic.

Lashing anchor system

The lashing anchor system is used for safe lashing of solid concrete elements during transport.
The special anchors with screwed-in lashing point ensure a safe attachment point of lashing straps.
The system is supplemented by accessories to protect the delicate concrete edges as well as anti-slip mats for proper load securing.

Your advantages

- Correct transport of precast elements in road traffic guaranteed
- Complete solution – coordinated system components
- Extensive range of accessories

Lashing anchor system

Anchor

Lashing Anchor 106

Anchor point

Lashing Point 108

Accesories

Fixing Bolt Shallow without pin for lashing anchor 109
Fixing Screw for Lashing Anchor 110
Cover Cap and External Cap for Lashing Anchor 111

Lashing Anchor

Use

- Threaded anchor with bolt head for securing the position of concrete shell segments during transport on trucks in road traffic
- Top-sided installation in the component
- To attach the lashing strap, screw the corresponding lashing point into the threaded socket.

Your advantages

- System specially designed for securing the position on the truck
- Available with bolts to simplify installation in the formwork
- Robust round thread – impervious to dirt and impact

Component recommendation

☑ Shaft/shell segment

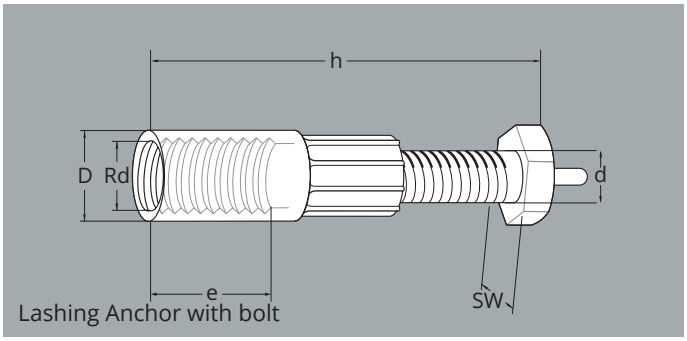

Lashing Anchor with bolt

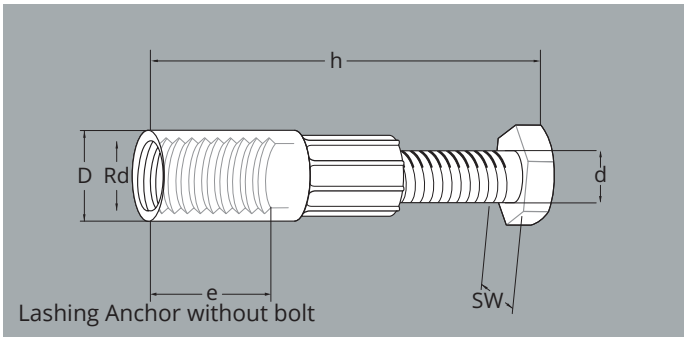

Lashing Anchor without bolt

Lashing Anchor with bolt – stainless steel socket

Ref. no.	Type	Thread size	Dimensions					Packing unit	Weight approx.	Price plus RTZ
			h [mm]	D [mm]	SW [mm]	d [mm]	e [mm]	[pieces]	[kg/pcs]	[EUR/pcs]
268438	**ZAB-VA-36**	Rd 36	180	47.0	46	30	48	1	1.30	**on request**
268475	**ZAB-VA-42**	Rd 42	202	54.6	55	36	57	1	2.10	**on request**

Lashing Anchor without bolt[1)] – stainless steel socket

Ref. no.	Type	Thread size	Dimensions					Packing unit	Weight approx.	Price plus RTZ
			h [mm]	D [mm]	SW [mm]	d [mm]	e [mm]	[pieces]	[kg/pcs]	[EUR/pcs]
398061	**ZAO-ZN-30**	Rd 30	170	39.5	30	20	56	100	0.73	**on request**
346391	**ZAO-ZN-36**	Rd 36	180	47.0	46	30	48	1	1.28	**on request**

[1)] The lashing anchor size Rd 30 has a CE mark. The CE mark refers exclusively to its alternative function as a load lifting attachment for precast concrete elements. The basis for this is the Directive 2006/42/EC of 17 May 2006 (EC Machinery Directive). Please note that the product may be used either for lashing or for lifting.

Lashing anchor without bolt – stainless steel socket

Ref. no.	Type	Thread size	Dimensions					Packing unit	Weight approx.	Price plus RTZ
			h [mm]	D [mm]	SW [mm]	d [mm]	e [mm]	[pieces]	[kg/pcs]	[EUR/pcs]
290496	**ZAO-VA-36**	Rd 36	180	47.0	46	30	48	1	1.28	**on request**
290497	**ZAO-VA-42**	Rd 42	202	54.6	55	36	57	1	2.10	**on request**

Lashing Point

Use

- Robust attachment point for lashing straps
- This ensures proper load securing of concrete shell segments.
- Screw the lashing point into a lashing anchor embedded in concrete. Pass the lashing strap through the eye of the attachment.
- LT versions ("low temperature") for low temperature ranges down to –40°C
- Optional buffer washer available for the pressure plate – protection against dents. Simply guide over the threaded bolt until the washer is in full contact with the pressure plate.

Your advantages

- System specially designed for securing the position on the truck
- Rubber buffer on shackle prevents damage to the component
- Buffer ring on pressure plate protects against dents
- Can also be used at extremely low outside temperatures (LT)
- Robust round thread – impervious to dirt and impact

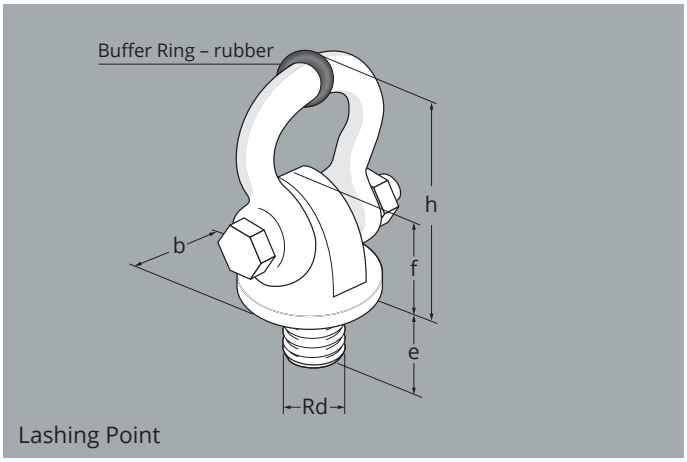

Lashing Point

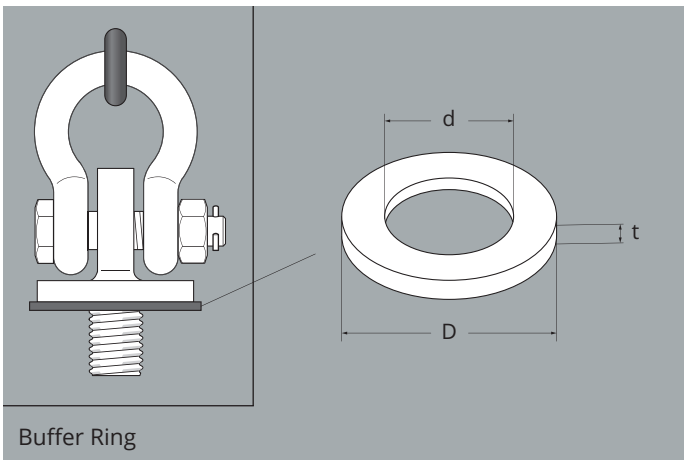

Buffer Ring

Lashing Point – galvanized steel – including rubber buffer on shackle

Ref. no.	Type	Thread size	Dimensions				Packing unit	Weight approx.	Price plus RTZ
			b [mm]	e [mm]	h [mm]	f [mm]	[pieces]	[kg/pcs]	[EUR/pcs]
228663	**ZRA-36**	Rd 36	100	47.5	186	92	1	4.90	**on request**
228664	**ZRA-42**	Rd 42	100	55.0	191	97	1	5.30	**on request**
263216	**ZRA-LT-36**	Rd 36	100	47.5	186	92	1	4.90	**on request**
263217	**ZRA-LT-42**	Rd 42	100	55.0	191	97	1	5.30	**on request**

Buffer Ring – rubber

Ref. no.	Type	For lashing point Type	Dimensions			Packing unit	Weight approx.	Price plus RTZ
			D [mm]	d [mm]	t [mm]	[pieces]	[kg/pcs]	[EUR/pcs]
234024	**ZPF-36**	ZRA-36/ZRA-LT-36	110	60	5	1	1.67	**on request**
234025	**ZPF-42**	ZRA-42/ZRA-LT-42	110	70	5	1	1.91	**on request**

Fixing Bolt Shallow without pin for lashing anchor

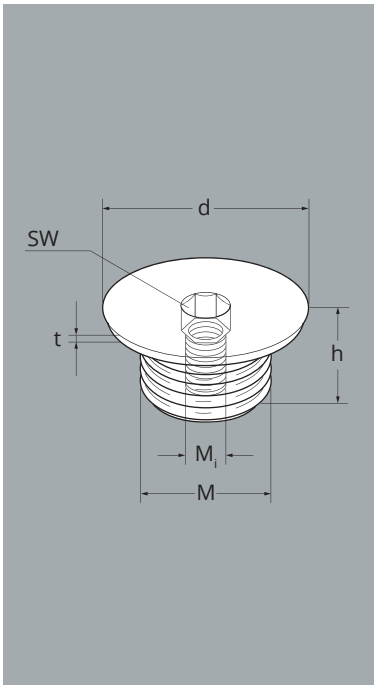

Use

- Simple formwork fixing of lashing anchors
- Insert the Fixing Bolt into the anchor and screw them together through the formwork using the fixing screw (available separately)
- For slightly recessed installation of anchors, the shape of the lashing point fills the recess.

Your advantages

- Reusable
- Small recess diameter
- Slightly recessed installation, thus ensuring concrete coverage
- Closure solutions available, plastic or stainless steel
- Easy to screw in and out via hexagon socket

Fixing Bolt Shallow without pin for lashing anchor – galvanized steel

Ref. no.	Type	Thread size	Dimensions					Packing unit	Weight approx.	Price plus RTZ
			h [mm]	d [mm]	t [mm]	SW [mm]	M_i [mm]	[pieces]	[kg/100 pcs]	[EUR/pcs]
268435	**BSZ-36**	M 36	32	59.0	4.5	14	M 10	1	23.8	**on request**
268436	**BSZ-42**	M 42	35	67.5	5.0	17	M 16	1	33.2	**on request**

Fixing Screw for Lashing Anchor

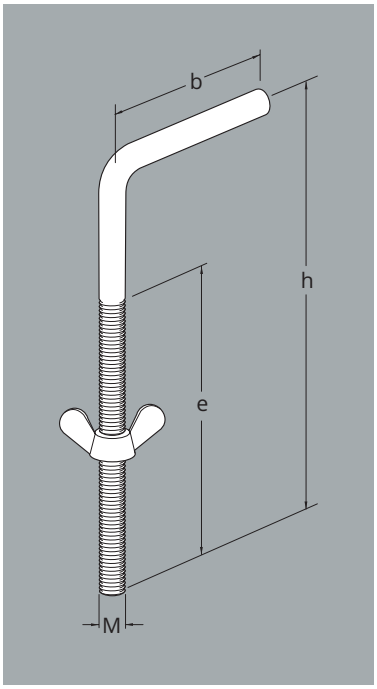

Use

- Connection of lashing anchors with fixing bolts through the formwork

Your advantages

- Easy to screw by hand via L-shape and wing nut
- Suitable for different formwork thicknesses
- Reusable

Fixing Screw – galvanized steel – for Fixing Bolts

Ref. no.	Type	For fixing bolts	Thread size	Dimensions			Packing unit	Weight approx.	Price plus RTZ
				b [mm]	e [mm]	h [mm]	[pieces]	[kg/100 pcs]	[EUR/pcs]
118544	**FIX-ZN-10**	M 36	M 10	60	110	150	1	12.62	**6.40**
118547	**FIX-ZN-16**	M 43	M 16	60	130	180	1	46.00	**12.75**

Cover Cap and External Cap for Lashing Anchor

Use

- Permanent closure of lashing anchors
- Adapted to formwork by means of a fixing bolt shallow without pin
- Cover caps are simply screwed into the anchor.
- Simply press the external cap into the threaded socket of the anchor

Your advantages

- High quality exterior view
- Time-saving anchor closures
- Protection against corrosion (cover cap)
- Slot for easy screwing in and out with a screwdriver (cover cap) or for easy removal of the external caps

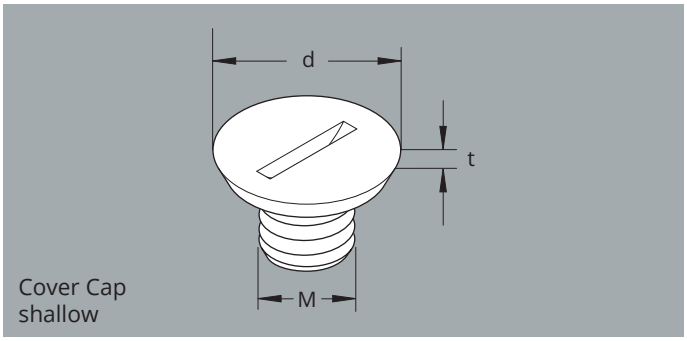

Cover Cap shallow

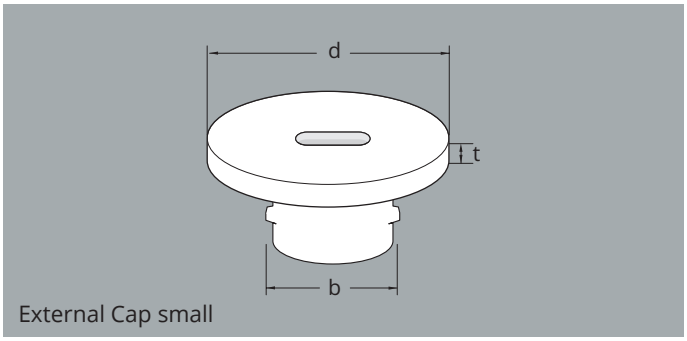

External Cap small

Cover Cap shallow for lashing anchor – stainless steel

Ref. no.	Type	For thread	Thread size	Dimensions d [mm]	Dimensions t [mm]	Packing unit [pieces]	Weight approx. [kg/100 pcs]	Price plus RTZ [EUR/pcs]
227928	**VSF-VA-36**	Rd/M 36	M 36	57.5	4.5	1	30.00	**37.70**
227929	**VSF-VA-42**	Rd/M 42	M 42	66.0	5.0	1	43.00	**51.60**

External Cap small for lashing anchor – plastic

Ref. no.	Type	System size	Thread size	Dimensions d [mm]	Dimensions b [mm]	Dimensions t [mm]	Packing unit [pieces]	Weight approx. [kg/100 pcs]	Price plus RTZ [EUR/pcs]
118649	**ASK-36**	Rd/M 36	M 36	52.5	36	3.5	100	0.67	**24.40**
135313	**ASK-42**	Rd/M 42	M 42	59.5	42	4.0	100	0.99	**48.70**

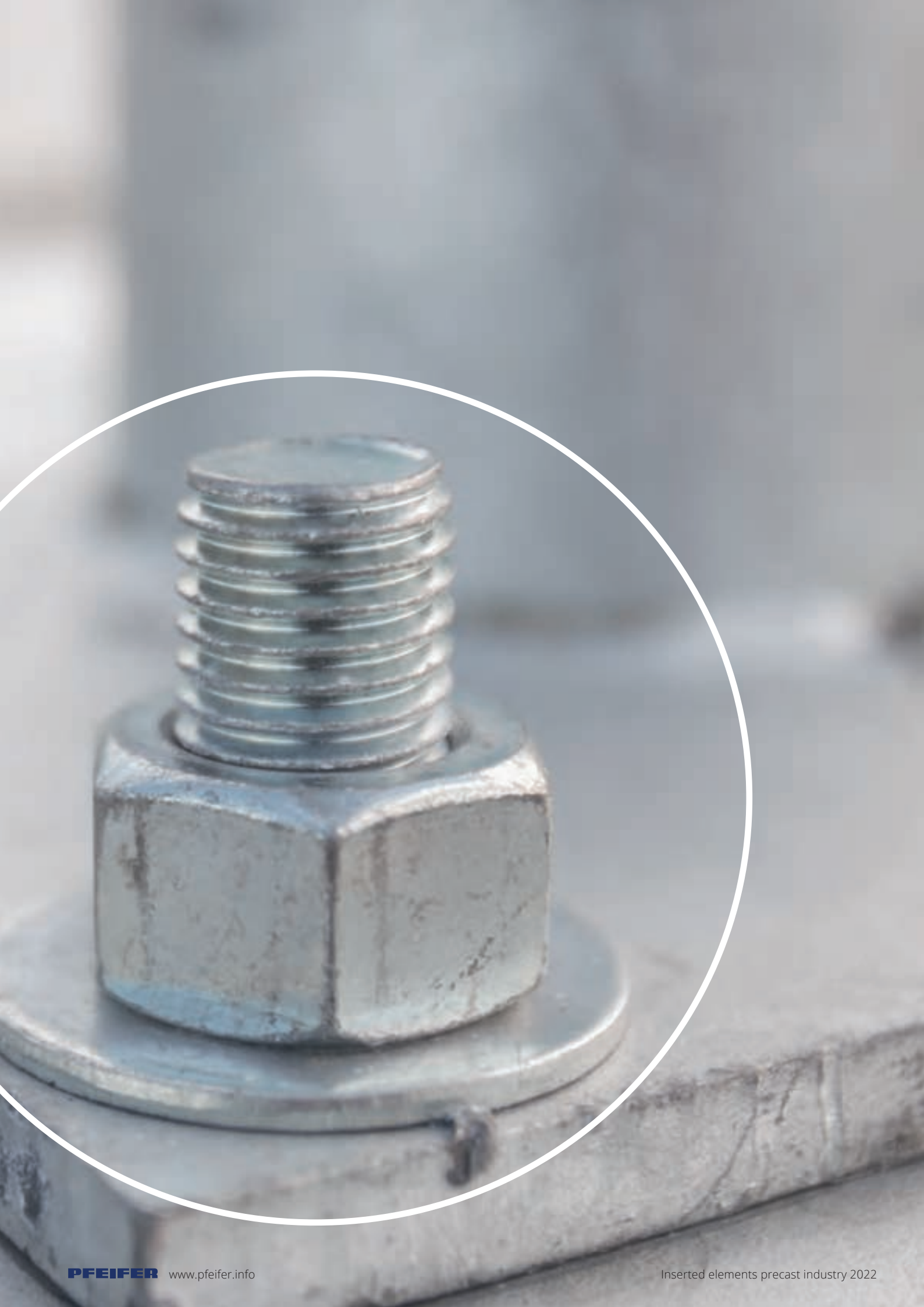

Fastening

Insert anchors p. 114

Insert anchors are fasteners used in precast concrete construction. The anchors are already planned and installed in the component prior to concreting.
When the concrete has cured, the internal thread of the anchors is free of concrete.
This allows a wide range of different components to be connected to the precast element by means of screws or bolts.
Various anchor versions are available for statically supporting or structural applications.

Steel anchors for subsequent fastening p. 128

Steel anchors for the subsequent fastening of steel parts to concrete and other building materials.

Standard parts p. 140

Useful standard parts for fastening or assembly.
Combinable with many Pfeifer products.

Weld-on points p. 142

Anchor plates consist of a steel plate with welded-on headed studs and are used as weld-on points to fasten steel components to concrete elements.
To this end the anchor plates are cast in the concrete element, where the headed studs act as anchors.
When installed, the steel plate is free of concrete and flush with the surface, making it possible to weld on a steel component.

Insert anchors

Insert anchors are fasteners used in precast concrete construction. The anchors are already planned and installed in the component prior to concreting. When the concrete has cured, the internal thread of the anchors is free of concrete. This allows a wide range of different components to be connected to the precast element by means of screws or bolts. Various anchor versions are available for statically supporting or structural applications.

Your advantages

- No expensive drilling and maximum resistances
- No dust and dirt on site
- Different service packages for every application

More information can be found at
www.pfeifer.info/db-anchor

Insert Anchor

Anchor

DB Base Anchor 116
DB Waved Anchor 117
Anchor bolt G1-K. 118
Socket Dowel with cross hole 119
Socket Dowel with cross hole and nailing plate 120
Socket Dowel with crimped end. 121
Socket Dowel with crimped end and nailing plate 122
Socket Dowel with angular end 123
Polyamide Socket 124

Accesories

Nail Disc for Socket Dowel. 125
Nail Plug for Polyamide Socket. 126
External Plate for Insert Anchor 127

Download the dimensioning software now free of charge
www.pfeifer-suite.info

DB Base Anchor

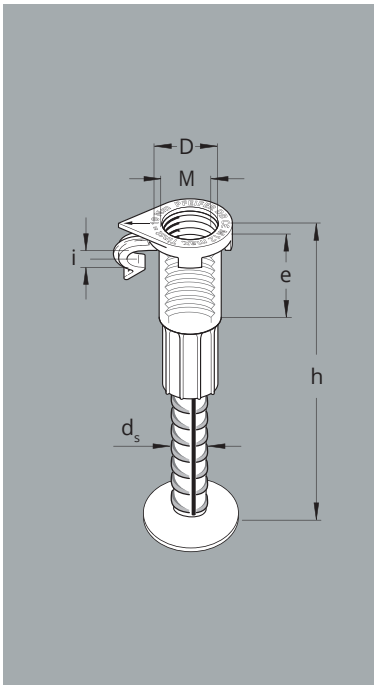

Use

- Fastener with swaged anchor base for anchoring permanent loads in a concrete component
- The anchor is cast into the precast element and can be used later as a structurally load-bearing fastening point with internal thread
- Anchors are delivered with a data clip pushed on for identification
- Additional reinforcement necessary on the anchor according to applicable approval!

Your advantages

- Short anchor length enables small minimum component thicknesses
- High performance, for use even in earthquake zones
- No expensive drilling and maximum resistances
- No dust and dirt on site
- Data clip marked with suitable screw size and maximum tightening torque $T_{inst.}$
- Data clip shows the load direction when installed
- High resistances
- Uniform dimensioning method throughout Europe
- Free dimensioning software
- European Technical Assessment (ETA)

Component recommendation

☑ Railing ☑ Machine foundations ☑ Stadium chairs

☑ Cable trays ☑ Steelwork connections

DB Base Anchor for permanent fixings – galvanized steel socket

Ref. no.	Type	Colour coding	Suitable screw size	Dimensions					Load carrier	Packing unit	Weight approx.	Price plus RTZ
				h[1)] [mm]	e [mm]	d_s [mm]	D [mm]	i [mm]	[pieces]	[pieces]	[kg/100 pcs]	[EUR/pcs]
238295	DBF-ZN-12	Pure white	M 12	80	22	8	15.0	6.5	1000	100	5.00	**4.20**
238312	DBF-ZN-16	Pure white	M 16	120	27	12	21.0	8.5	1000	50	20.00	**4.80**
238314	DBF-ZN-20	Pure white	M 20	150	35	16	27.2	11.0	300	25	39.00	**7.30**
238315	DBF-ZN-24	Pure white	M 24	180	43	16	31.0	13.0	200	25	47.50	**9.75**
238316	DBF-ZN-30	Pure white	M 30	220	56	20	39.5	13.0	210	15	101.00	**13.30**

DB Base Anchor for permanent fixings – stainless steel socket

Ref. no.	Type	Colour coding	Suitable screw size	Dimensions					Load carrier	Packing unit	Weight approx.	Price plus RTZ
				h[1)] [mm]	e [mm]	d_s [mm]	D [mm]	i [mm]	[pieces]	[pieces]	[kg/100 pcs]	[EUR/pcs]
238320	DBF-VA-12	Pure white	M 12	80	22	8	15.0	6.5	1000	100	5.00	**12.30**
238322	DBF-VA-16	Pure white	M 16	120	27	12	21.0	8.5	1000	50	20.00	**17.15**
238324	DBF-VA-20	Pure white	M 20	150	35	16	27.2	11.0	300	25	39.00	**26.80**
238360	DBF-VA-24	Pure white	M 24	180	43	16	31.0	13.0	200	25	47.50	**37.70**
238361	DBF-VA-30	Pure white	M 30	220	56	20	39.5	13.0	210	15	101.00	**72.80**

[1)] incl. material thickness of the pushed-on data clip

DB Waved Anchor

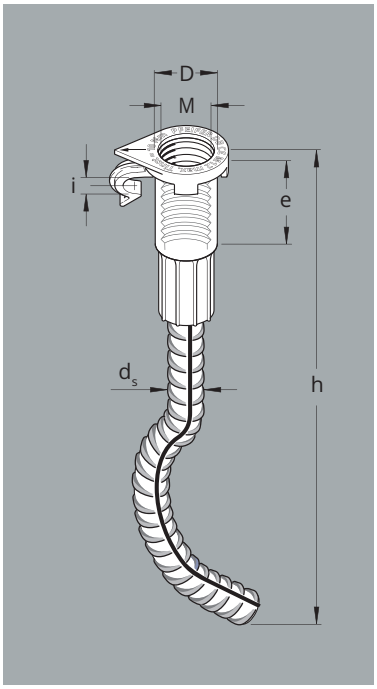

Use

- Fastener with corrugated bar for anchoring permanent loads in a concrete component
- The anchor is cast into the precast element and can be used later as a structurally load-bearing fastening point with internal thread Anchors are delivered with a data clip pushed on for identification
- Additional reinforcement necessary on the anchor according to applicable approval!

Your advantages

- Longer anchor with waved bar end for gentle load application and thus short edge/axis distances
- No expensive drilling and maximum resistances
- No dust and dirt on site
- Data clip marked with suitable screw size and maximum tightening torque $T_{inst.}$
- Data clip shows the load direction when installed
- High resistances
- Uniform dimensioning method throughout Europe
- Free dimensioning software
- European Technical Assessment (ETA)

Component recommendation

☑ Railing ☑ Machine foundations ☑ Stadium chairs

☑ Cable trays ☑ Steelwork connections

DB Waved Anchor – galvanized steel socket

Ref. no.	Type	Colour coding	Suitable screw size	Dimensions					Load carrier	Packing unit	Weight approx.	Price plus RTZ
				h[1)] [mm]	e [mm]	d_s [mm]	D [mm]	i [mm]	[pieces]	[pieces]	[kg/100 pcs]	[EUR/pcs]
195240	**DBW-ZN-12**	Silver grey	M 12	110	22	8	15.0	6.5	600	100	5.80	**3.35**
206361	**DBW-ZN-16**	Silver grey	M 16	174	27	12	21.0	8.5	800	50	20.50	**4.30**
206368	**DBW-ZN-20**	Silver grey	M 20	194	35	16	27.2	11.0	1500	25	43.00	**6.60**
195232	**DBW-ZN-24**	Silver grey	M 24	252	43	16	31.0	13.0	300	25	56.00	**8.20**
206369	**DBW-ZN-30**	Silver grey	M 30	302	56	20	39.5	13.0	210	15	110.00	**12.45**

DB Waved Anchor – stainless steel socket

Ref. no.	Type	Colour coding	Suitable screw size	Dimensions					Load carrier	Packing unit	Weight approx.	Price plus RTZ
				h[1)] [mm]	e [mm]	d_s [mm]	D [mm]	i [mm]	[pieces]	[pieces]	[kg/100 pcs]	[EUR/pcs]
195237	**DBW-VA-12**	Silver grey	M 12	110	22	8	15.0	6.5	600	100	6.50	**11.05**
206364	**DBW-VA-16**	Silver grey	M 16	174	27	12	21.0	8.5	800	50	20.50	**15.85**
206365	**DBW-VA-20**	Silver grey	M 20	194	35	16	27.2	11.0	1500	25	43.00	**25.25**
195234	**DBW-VA-24**	Silver grey	M 24	252	43	16	31.0	13.0	300	25	60.00	**35.70**
206372	**DBW-VA-30**	Silver grey	M 30	302	56	20	39.5	13.0	210	15	100.00	**69.80**

[1)] inkl. Materialstärke des aufgesteckten Richtungsclips

Anchor bolt G1-K

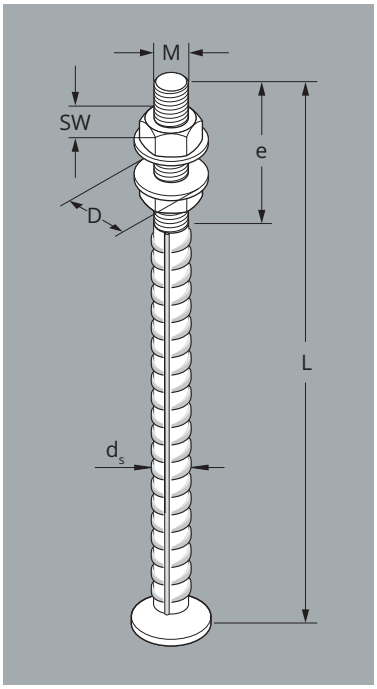

Use

- Foundation Anchor for steel columns or concrete-side anchoring for other steelwork connections with swaged foot
- Integrated threaded bolt, which protrudes from the component after concreting of the anchoring base.
- Steel parts can be connected to it using washers and nuts

Your advantages

- Simple threaded connection
- Subsequent adjustment possible
- Rigid load-bearing connection
- General Building Authority Approval (abZ)
- European Technical Assessment (ETA)

Component recommendation

✓ Steelwork connections

G1-K Anchor Bolt – black steel

Ref. no.	Type	Thread size	Dimensions					Load carrier	Packing unit	Weight approx.	Price plus RTZ
			L [mm]	e [mm]	SW [mm]	D [mm]	d_s [mm]	[pieces]	[pieces]	[kg/pcs]	[EUR/pcs]
281337	**PGS-16/G1-K**	M 16	280	100	24	45	16	100	1	0.90	**8.65**
281338	**PGS-20/G1-K**	M 20	350	110	30	45	20	100	1	1.20	**10.40**
281339	**PGS-24/G1-K**	M 24	430	120	36	55	25	100	1	2.20	**14.20**
281340	**PGS-30/G1-K**	M 30	550	140	46	65	32	100	1	3.70	**19.15**
281341	**PGS-36/G1-K**	M 36	700	170	55	75	40	100	1	6.90	**48.10**
289222	**PGS-39/G1-K**	M 39	750	170	60	75	40	100	1	7.78	**53.00**

Socket Dowel with cross hole

Use

- Fastener with cross hole for structural applications
- Load is introduced via additional retention reinforcement, which is threaded through the cross hole

Your advantages

- Cost-effective fasteners
- Different load angles possible
- Large selection of common thread sizes

Component recommendation

- ✓ Bench consoles
- ✓ Installation brackets
- ✓ Garden fences
- ✓ Flower troughs

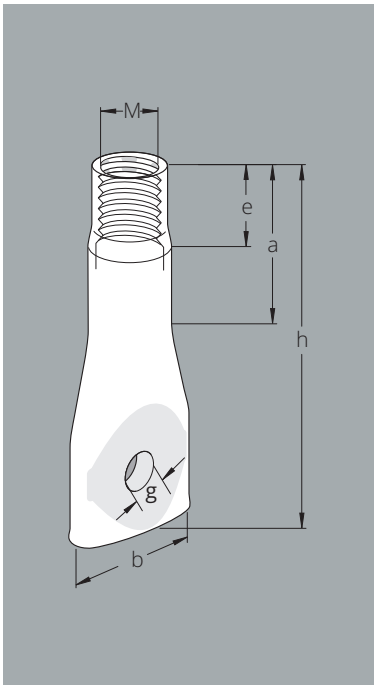

Socket Dowel with cross hole – galvanized steel

Ref. no.	Type	Thread size	Dimensions				Packing unit	Weight approx.	Price plus RTZ
			h [mm]	a [mm]	e [mm]	g [mm]	[pieces]	[kg/100 pcs]	[EUR/100 pcs]
186965	**HDQ-ZN-6/40**	M 6	40	20	6	6.0	500	0.70	**41.20**
118805	**HDQ-ZN-8/40**	M 8	40	20	8	8.1	500	0.84	**41.20**
118807	**HDQ-ZN-8/50**	M 8	50	25	8	8.1	500	1.10	**45.20**
118819	**HDQ-ZN-10/50**	M 10	50	20	10	6.2	500	2.00	**74.00**
118832	**HDQ-ZN-12/60**	M 12	60	23	12	7.2	400	4.00	**95.80**
179609	**HDQ-ZN-12/70**	M 12	70	30	12	7.2	400	5.00	**104.50**
118855	**HDQ-ZN-16/70**	M 16	70	25	16	9.2	200	9.15	**146.00**
118857	**HDQ-ZN-16/80**	M 16	80	25	16	12.2	200	10.20	**156.50**
118859	**HDQ-ZN-16/100**	M 16	100	32	16	9.2	100	13.40	**186.50**
186968	**HDQ-ZN-16/120**	M 16	120	45	16	12.2	100	15.70	**228.00**
179600	**HDQ-ZN-20/100**	M 20	100	40	20	12.2	100	17.00	**271.50**
179601	**HDQ-ZN-20/120**	M 20	120	40	20	14.2	100	21.00	**316.00**
179612	**HDQ-ZN-24/120**	M 24	120	50	24	14.2	50	33.30	**486.00**
209489	**HDQ-ZN-30/150**	M 30	150	70	30	15.2	25	55.00	**768.00**

Socket Dowel with cross hole – stainless steel

Ref. no.	Type	Thread size	Dimensions				Packing unit	Weight approx.	Price plus RTZ
			h [mm]	a [mm]	e [mm]	g [mm]	[pieces]	[kg/100 pcs]	[EUR/100 pcs]
118808	**HDQ-VA-8/50**	M 8	50	25	8	8.1	200	1.10	**216.50**
179607	**HDQ-VA-10/50**	M 10	50	20	10	6.2	100	2.00	**257.00**
179610	**HDQ-VA-12/60**	M 12	60	23	12	7.2	100	4.26	**347.00**
118867	**HDQ-VA-16/80**	M 16	80	25	16	12.2	100	10.00	**707.00**
118884	**HDQ-VA-20/100**	M 20	100	40	20	12.2	75	17.00	**1191.00**

Socket Dowel with cross hole and nailing plate

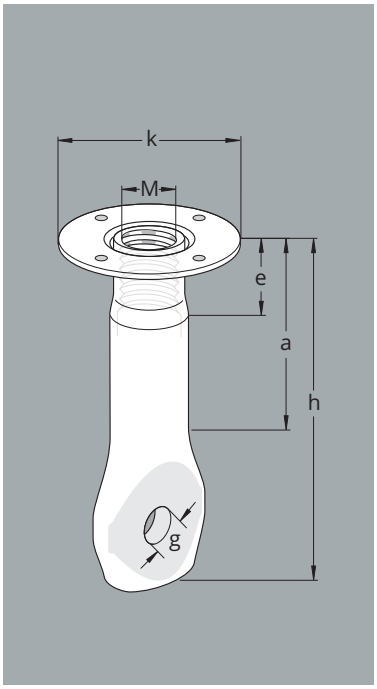

Use

- Fastener with transverse hole for structural applications in a concrete component
- Load is introduced via additional retention reinforcement, which is threaded through the cross hole

Your advantages

- Simple formwork fixing with integrated nailing plate
- Cost-effective fasteners
- Different load angles possible
- Large selection of common thread sizes

Component recommendation

- ✓ Bench consoles
- ✓ Installation brackets
- ✓ Garden fences
- ✓ Flower troughs

Socket Dowel with cross hole and nailing plate – galvanized steel

Ref. no.	Type	Thread size	Dimensions					Packing unit	Weight approx.	Price plus RTZ
			h [mm]	a [mm]	e [mm]	g [mm]	k [mm]	[pieces]	[kg/100 pcs]	[EUR/100 pcs]
250648	**HDQN-ZN-10/50**	M 10	50	24	10	6.2	34	500	2.80	**119.00**
250649	**HDQN-ZN-12/70**	M 12	70	30	12	7.2	40	200	6.20	**153.50**
250651	**HDQN-ZN-16/100**	M 16	100	32	16	9.2	44	100	14.60	**258.00**
250652	**HDQN-ZN-20/100**	M 20	100	40	20	12.2	48	100	18.00	**340.00**

Socket Dowel with crimped end

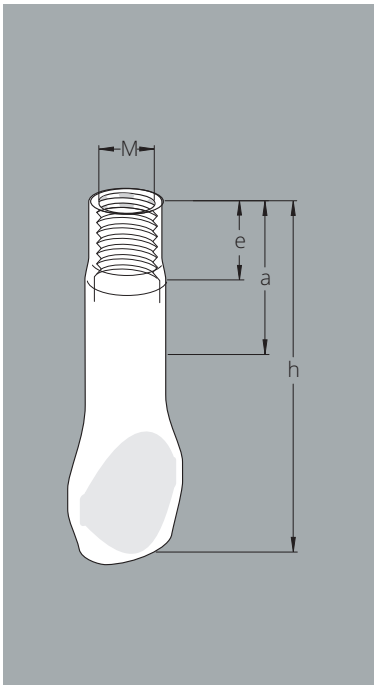

Use

- Fastener with corrugated end for structural applications in a concrete structure
- Anchoring in the concrete is achieved by the form fit of the corrugated end

Your advantages

- Cost-effective fasteners
- No additional reinforcement required
- Different load angles possible
- Large selection of common thread sizes

Component recommendation

- ✓ Bench consoles
- ✓ Installation brackets
- ✓ Garden fences
- ✓ Flower troughs

Socket Dowel with crimped end – galvanized steel

Ref. no.	Type	Thread size	Dimensions			Packing unit	Weight approx.	Price plus RTZ
			h [mm]	a [mm]	e [mm]	[pieces]	[kg/100 pcs]	[EUR/100 pcs]
118704	**HDW-ZN-6/40**	M 6	40	25	6	500	0.90	**34.60**
271630	**HDW-ZN-8/50**	M 8	50	25	8	500	2.20	**38.50**
186961	**HDW-ZN-10/50**	M 10	50	25	10	500	2.20	**61.60**
186962	**HDW-ZN-10/60**	M 10	60	30	10	500	2.50	**70.00**
186963	**HDW-ZN-12/50**	M 12	50	30	12	400	3.60	**74.10**
118737	**HDW-ZN-12/70**	M 12	70	40	12	400	5.30	**90.70**
118757	**HDW-ZN-16/70**	M 16	70	30	16	200	8.00	**127.00**
118761	**HDW-ZN-16/100**	M 16	100	50	16	100	13.80	**185.00**
179603	**HDW-ZN-20/100**	M 20	100	50	20	100	15.10	**230.00**
179604	**HDW-ZN-24/100**	M 24	100	40	24	50	27.00	**423.00**

Socket Dowel with crimped end – stainless steel

Ref. no.	Type	Thread size	Dimensions			Packing unit	Weight approx.	Price plus RTZ
			h [mm]	a [mm]	e [mm]	[pieces]	[kg/100 pcs]	[EUR/100 pcs]
179602	**HDW-VA-6/40**	M 6	40	25	6	200	0.80	**185.50**
271627	**HDW-VA-10/50**	M 10	50	25	10	400	3.20	**256.50**
257568	**HDW-VA-10/60**	M 10	60	30	10	400	3.80	**307.00**

Socket Dowel with crimped end and nailing plate

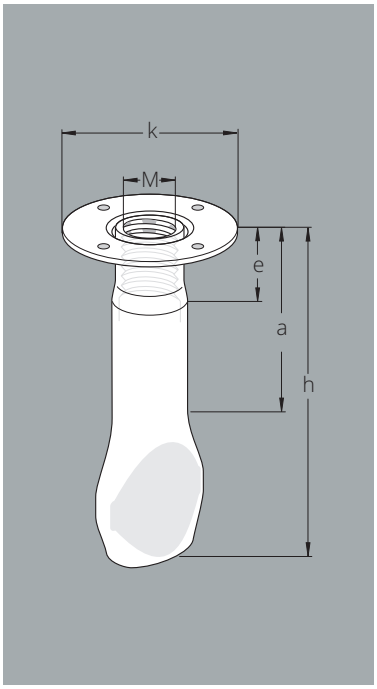

Use

- Fastener with corrugated end for structural applications in a concrete structure
- Anchoring in the concrete is achieved by the form fit of the corrugated end

Your advantages

- Simple formwork fixing with integrated nailing plate
- Cost-effective fasteners
- No additional reinforcement required
- Different load angles possible
- Large selection of common thread sizes

Component recommendation

- ✓ Bench consoles
- ✓ Installation brackets
- ✓ Garden fences
- ✓ Flower troughs

Socket Dowel with crimped end and nailing plate – galvanized steel

Ref. no.	Type	Thread size	Dimensions				Packing unit	Weight approx.	Price plus RTZ
			h [mm]	a [mm]	e [mm]	k [mm]	[pieces]	[kg/100 pcs]	[EUR/100 pcs]
250638	**HDWN-ZN-12/70**	M 12	70	40	12	40	200	6.40	**144.50**
250639	**HDWN-ZN-16/100**	M 16	100	50	16	44	100	12.90	**246.00**

Socket Dowel with angular end

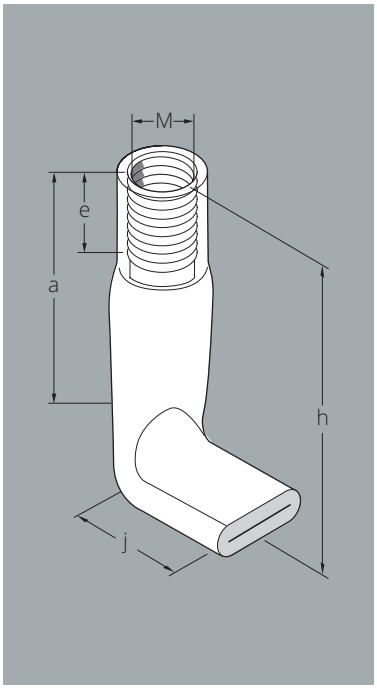

Use

- Fastener with angled end for structural applications in a concrete component
- Anchoring in the concrete is achieved by the form fit of the angled end

Your advantages

- Cost-effective fasteners
- No additional reinforcement required
- Different load angles possible
- Large selection of common thread sizes

Component recommendation

- ✓ Bench consoles
- ✓ Installation brackets
- ✓ Garden fences
- ✓ Flower troughs

Socket Dowel with angular end – galvanized steel

Ref. no.	Type	Thread size	Dimensions					Packing unit	Weight approx.	Price plus RTZ
			h [mm]	a [mm]	e [mm]	j [mm]	d [mm]	[pieces]	[kg/100 pcs]	[EUR/100 pcs]
250640	**HDWE-ZN-8/50**	M 8	50	25	8	20	9	500	1.80	**77.00**
118902	**HDWE-ZN-10/60**	M 10	60	35	10	25	12	400	3.80	**106.50**
118909	**HDWE-ZN-12/45**	M 12	45	18	12	25	14.9	400	4.80	**118.00**
250641	**HDWE-ZN-12/70**	M 12	70	40	12	30	14.9	200	7.10	**141.00**
250642	**HDWE-ZN-16/60**	M 16	60	25	16	30	19.8	200	10.30	**183.00**
250643	**HDWE-ZN-16/100**	M 16	100	32	16	35	19.8	100	15.30	**249.50**
250644	**HDWE-ZN-20/70**	M 20	70	30	20	30	23.5	100	14.00	**277.00**
250645	**HDWE-ZN-20/100**	M 20	100	40	20	35	23.5	50	20.00	**379.00**
250646	**HDWE-ZN-24/80**	M 24	80	24	24	35	29.6	50	32.40	**471.00**

Polyamide Socket

Use

- Plastic fastener for structural applications in a concrete component
- Suitable for high corrosion protection requirements

Your advantages

- Friction locked fit at pre-determined point
- No risk of corrosion
- Resistant to sustained heat (UV light), weathering and hot water
- Resistant to neutral oils, greases, fuels and most solvents

Component recommendation

- ✓ Bench consoles
- ✓ Installation brackets
- ✓ Garden fences
- ✓ Flower troughs

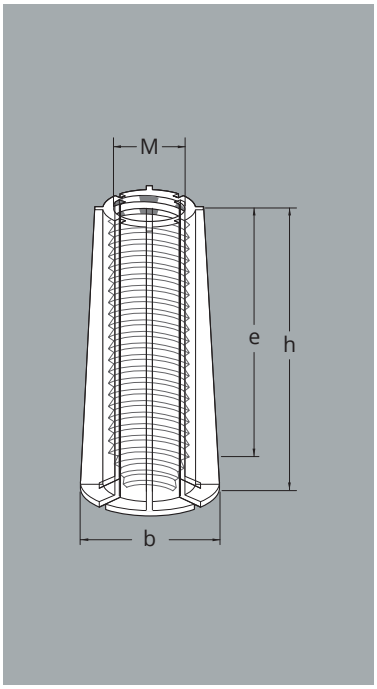

Polyamide Socket – plastic

Ref. no.	Type	Thread size	Dimensions				Packing unit	Weight approx.	Price plus RTZ
			h [mm]	b [mm]	e [mm]	e_{min} [mm]	[pieces]	[kg/100 pcs]	[EUR/100 pcs]
118206	**PY-6**	M 6	23	14	20	17	1000	0.18	**24.40**
118207	**PY-8**	M 8	30	17	26	22	1000	0.33	**31.80**
118208	**PY-10**	M 10	37	24	31	27	1000	0.62	**34.20**
118209	**PY-12**	M 12	44	27	38	33	1000	0.97	**65.70**
118212	**PY-16**	M 16	58	32	48	43	1000	1.94	**102.00**

Nail Disc for Socket Dowel

Use

- Simple formwork fixing of Socket Dowels
- Screw the nail disc into the Socket Dowel and nail, screw or glue it to the formwork

Your advantages

- Short thread pitches save assembly time
- Especially robust and dimensionally stable polyethylene plastic
- Predrilled nail holes facilitate nail placement
- Two countersunk nail holes for a particularly smooth recess surface
- Different, coordinated closure solutions available

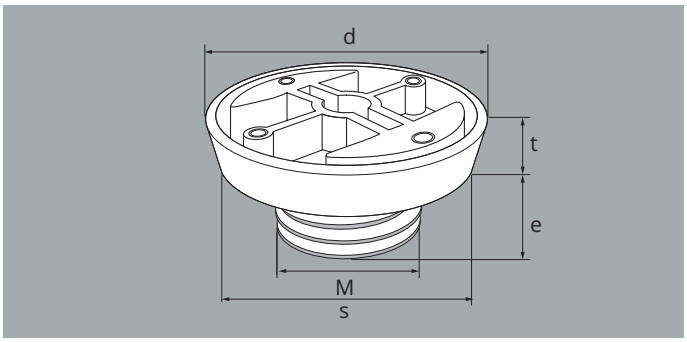

Nail Disc for Socket Dowel – plastic

Ref. no.	Type	Farbe	For thread	Thread size	Dimensions				Packing unit	Weight approx.	Price plus RTZ
					d [mm]	s [mm]	t [mm]	e [mm]	[pieces]	[kg/100 pcs]	[EUR/100 pcs]
391646	**NT-10**	Light blue	Rd/M 10	M 10	59.0	55.5	10	10	200	0.49	**29.55**
391647	**NT-12**	Pastel orange	Rd/M 12	M 12	59.0	55.5	10	10	200	0.51	**32.20**
391648	**NT-14**	Pure white	Rd/M 14	M 14	59.0	55.5	10	10	200	0.55	**35.50**
391649	**NT-16**	Flame red	Rd/M 16	M 16	59.0	55.5	10	10	200	0.59	**36.20**
391650	**NT-18**	Light pink	Rd/M 18	M 18	59.0	55.5	10	10	200	1.07	**36.50**
391651	**NT-20**	Pastel green	Rd/M 20	M 20	59.0	55.5	10	10	200	1.15	**36.70**
391652	**NT-24**	Anthracite grey	Rd/M 24	M 24	59.0	55.5	10	10	200	1.30	**38.00**
391653	**NT-30**	Emerald green	Rd/M 30	M 30	59.0	55.5	10	10	150	1.97	**45.20**

Nail Plug for Polyamide Socket

Use

- Fixing of polyamide sockets to a wooden or plastic formwork

Your advantages

- Simple formwork fixing
- Optimally matched to polyamide sockets

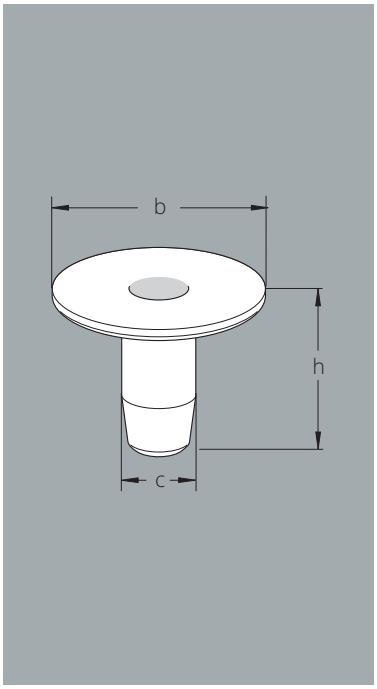

Nail Plug for Polyamide Socket – plastic

Ref. no.	Type	For polyamide socket	Dimensions			Packing unit	Weight approx.	Price plus RTZ
			h [mm]	b [mm]	c [mm]	[pieces]	[kg/100 pcs]	[EUR/100 pcs]
118217	**NST-6**	PY-6	11	24	5.5	500	0.09	**26.70**
118218	**NST-8**	PY-8	14	26	6.8	500	0.12	**29.90**
118219	**NST-10**	PY-10	17	28	8.7	500	0.14	**33.60**
118220	**NST-12**	PY-12	20	30	10.3	500	0.16	**45.50**
118222	**NST-16**	PY-16	26	36	14.0	500	0.24	**47.30**

External Plate for Insert Anchor

Use

- Permanent closure of threaded anchors
- Designed for PFEIFER Nail Disc
- Stainless steel External Plates are simply screwed into the anchor
- Concrete External Plates are glued into the anchor.

Your advantages

- High quality exterior view
- Time-saving anchor closures
- Protection against corrosion
- Hexagon socket for easy screwing and unscrewing by means of Allen key (stainless steel version)

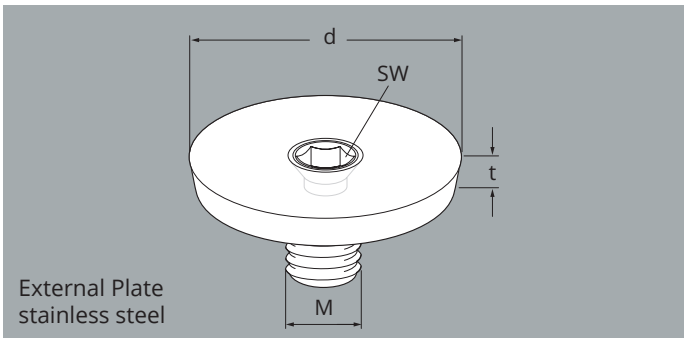

External Plate stainless steel

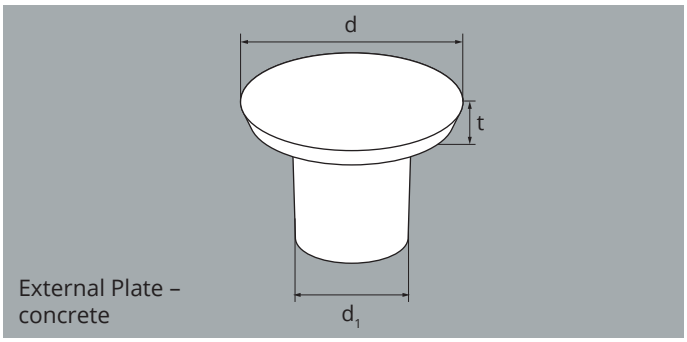

External Plate – concrete

External Plate – stainless steel

Ref. no.	Type	For thread	Thread size	Dimensions			Packing unit	Weight approx.	Price plus RTZ
				SW [mm]	d [mm]	t [mm]	[pieces]	[kg/100 pcs]	[EUR/100 pcs]
202668	**ATN-VA-12**	Rd/M 12	M 12	5	58.0	10	20	17.10	**25.35**
202667	**ATN-VA-16**	Rd/M 16	M 16	5	58.0	10	20	18.20	**34.20**
202666	**ATN-VA-20**	Rd/M 20	M 20	5	58.0	10	20	19.50	**45.30**
202665	**ATN-VA-24**	Rd/M 24	M 24	6	58.0	10	20	23.00	**57.90**
202664	**ATN-VA-30**	Rd/M 30	M 30	6	58.0	10	6	27.00	**70.20**

External Plate – FLOWSTONE concrete – colour similar to RAL 7044

Ref. no.	Type	For thread	Dimensions			Packing unit	Weight approx.	Price plus RTZ
			d [mm]	d_1 [mm]	t [mm]	[pieces]	[kg/100 pcs]	[EUR/100 pcs]
278360	**ATN-B-12**	Rd/M 12	57.0	10.5	9.0	50	3.80	**2.43**
278362	**ATN-B-16**	Rd/M 16	57.0	14.3	9.0	50	4.60	**2.43**
278363	**ATN-B-20**	Rd/M 20	57.0	18.1	9.0	50	5.20	**2.43**
278364	**ATN-B-24**	Rd/M 24	57.0	21.7	9.0	50	5.90	**2.43**
278365	**ATN-B-30**	Rd/M 30	57.0	27.7	9.0	50	7.70	**2.43**

Steel anchors for subsequent fastening

Steel anchors for the subsequent fastening of steel parts to concrete and other building materials.

Your advantages

- Subsequent fastening – little planning effort and simple assembly without tolerance problems
- Fastener for a wide range of applications,
- building materials, loads and other requirements
- Regulated use through approvals

More information can be found at
www.pfeifer.info/steel anchor

Steel anchors for subsequent fastening

UCS Concrete Screw and UltraCut concrete screw

UCS Concrete Screw 130
UltraCut FBS II concrete screw 131
MAX express anchor 133
IMC express anchor. 135

Screws, nuts and washers

Standard parts 140
Hexagon Head Bolt 140
Hexagon Nut. 140
Washer. 140

UCS Concrete Screw

Use

- Fastener for a wide range of applications in concrete, solid building materials and brickwork with a dense structure
- Approved for concrete C20/25 to C50/60
- Set drill hole, clean drill hole. Insert bolt through the part to be fastened. Visual inspection – ready
- The pressed-on washer makes the bolt ideal for fastening steel parts with slotted holes
- Drive: Hex head or hex head with Torx (TX)

Your advantages

- Approved in cracked and non-cracked concrete
- Time-saving push-through installation
- Approval-compliant release/readjustment possible twice
- Minimum edge/axis distances, because expansion-free anchoring
- Assembly requires no additional dowels
- High resistances according to European approval
- Wide package of approvals with ETA Option 1, seismic, fire resistance (R120) and compliance with VdS CEA directives

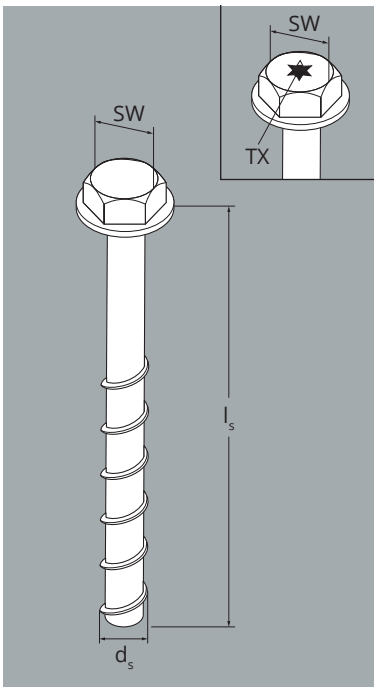

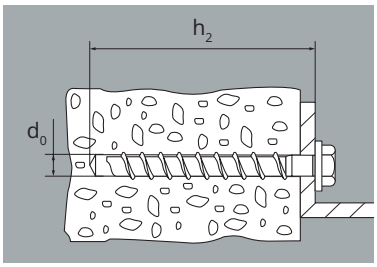

Component recommendation

- ✓ Ground anchoring of push-pull props
- ✓ Railing
- ✓ Steelwork connections
- ✓ Machine foundations
- ✓ Fixing bracket
- ✓ Ladders
- ✓ Cable trays

UCS Concrete Screw – galvanized steel

Ref. no.	Type	Drilling diameter	Drilling depth[1]	Dimensions			Packing unit	Weight approx.	Price plus RTZ
		d_0 [mm]	h_2 [mm]	d_s [mm]	l_s [mm]	SW/TX	[pieces]	[kg/100 pcs]	[EUR/100 pcs]
396791	**UCS 8x55 US TX**	8	65	10	55	13/40	50	3.32	**100.50**
396792	**UCS 8x70 US TX**	8	80	10	70	13/40	50	3.90	**105.00**
396793	**UCS 8x80 US TX**	8	90	10	80	13/40	50	4.28	**108.00**
396794	**UCS 10x70 US**	10	80	12	70	15	50	5.98	**133.50**
396795	**UCS 10x80 US**	10	90	12	80	15	50	6.60	**137.50**
396796	**UCS 10x80 US**	10	100	12	90	15	50	7.15	**143.00**
396797	**UCS 10x100 US**	10	110	12	100	15	50	7.77	**150.50**
428497	**UCS 10x120 US**	10	130	12	120	15	50	8.96	**197.00**
428498	**UCS 10x140 US**	10	150	12	140	15	50	10.11	**236.50**
396798	**UCS 12x85 US**	12	95	14	85	17	20	9.88	**241.50**
396799	**UCS 12x110 US**	12	120	14	110	17	20	12.03	**265.00**
396800	**UCS 12x130 US**	12	140	14	130	17	20	13.60	**293.50**
423971	**UCS 14x75 US**	14	90	16	75	21	20	12.59	**317.00**
396801	**UCS 14x100 US**	14	115	16	100	21	20	15.43	**374.00**
396802	**UCS 14x125 US**	14	140	16	125	21	10	18.41	**392.00**
396803	**UCS 14x150 US**	14	165	16	150	21	10	21.23	**461.00**

[1] Minimum drill hole depth for push-through installation

UltraCut FBS II concrete screw

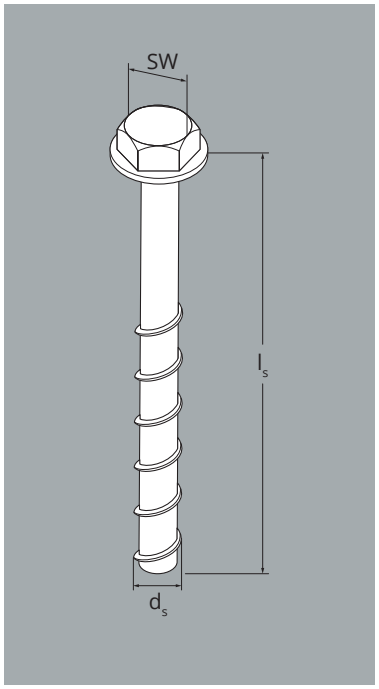

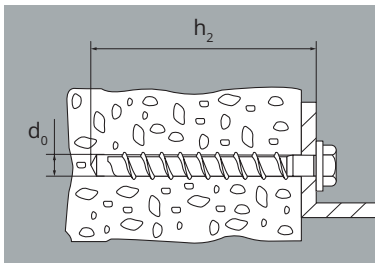

Use

- Fastener for a wide range of applications in
- concrete, solid building materials and brickwork with a dense structure
- Approved for concrete C20/25 to C50/60
- Set drill hole, clean drill hole.
- Insert bolt through the part to be fastened.
- Visual inspection – ready
- The pressed-on washer makes the bolt ideal for fastening steel parts with slotted holes
- Test reusability with optionally available test socket according to approval.
- Drive: Hex head

Your advantages

- Reusable according to approval – temporary fastenings
- Also usable in young concrete from 10 N/mm2 – temporary fastenings
- Approved in cracked and non-cracked concrete
- Time-saving push-through installation
- Approval-compliant release/readjustment possible twice
- Minimum edge/axis distances, because expansion-free anchoring
- Assembly requires no additional dowels
- High resistances according to European approval
- Broad approval package with ETA Option 1, seismic and fire resistance (R120)

Component recommendation

- ✓ Ground anchoring of push-pull props
- ✓ Railing
- ✓ Steelwork connections
- ✓ Machine foundations
- ✓ Fixing bracket
- ✓ Ladders
- ✓ Cable trays

UltraCut FBS II US concrete screw – galvanized steel

Ref. no.	Type	Drilling diameter	Drilling depth[1)]	Dimensions			Packing unit	Weight approx.	Price plus RTZ
		d_0 [mm]	h_2 [mm]	d_s [mm]	l_s [mm]	SW	[pieces]	[kg/100 pcs]	[EUR/100 pcs]
467879	**FBS II 10x100 US**	10	110	12	100	15	50	7.77	**on request**

[1)] Minimum drill hole depth for push-through installation

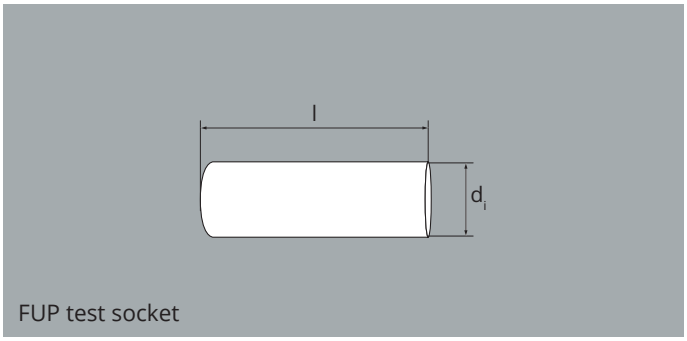

FUP test socket

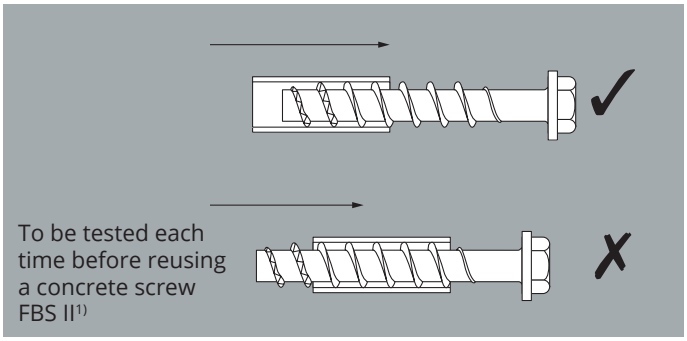
To be tested each time before reusing a concrete screw FBS II[1)]

FUP test socket – for UltraCut FBS II US concrete screw – steel

Ref. no.	Type	To fit bolt	Dimensions		Packing unit	Weight approx.	Price plus RTZ
			d_i [mm]	l [mm]	[pieces]	[kg/100 pcs]	[EUR/100 pcs]
503439	**FUP 10**	FBS II 10	12	30	1	2.24	**on request**

[1)] Refer to manufacturer's full assembly instructions at www.fischer.de!

MAX express anchor

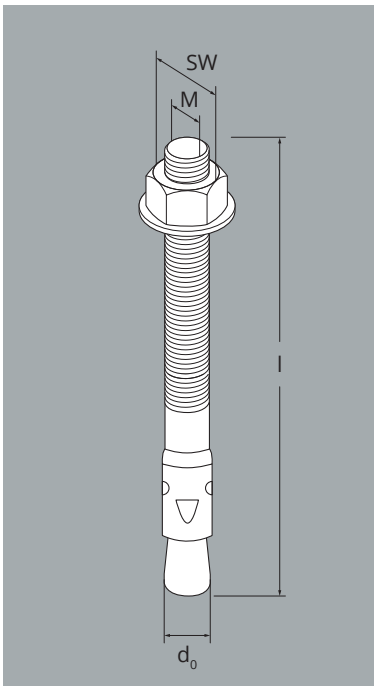

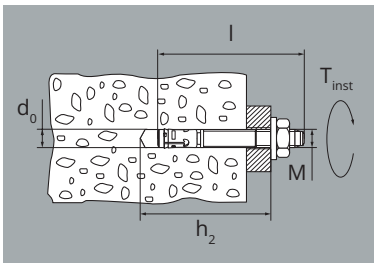

Use

- Bolt anchor as fastener for a wide variety of applications in concrete construction, for cracked and non-cracked concrete as well as natural stone with a dense structure
- Approved for concrete C20/25 to C50/60
- Set drill hole, clean drill hole.
- Insert the anchor into the hole through the part to be fastened using a hammer, spread the anchor with assembly torque $T_{inst.}$
- Visual inspection – ready
- Short version "K" with reduced anchoring depth

Your advantages

- Approved in cracked and non-cracked concrete
- Time-saving push-through installation
- High resistances according to European approval
- Broad approval package with ETA Option 1, seismic and fire resistance (R120)
- Low impact energy and short tightening travel
- High flexibility through variable anchoring depths
- Assembly requires no additional dowels
- Price/performance wonder among bolt anchors

Component recommendation

- ✓ Ground anchoring of push-pull props
- ✓ Railing
- ✓ Steelwork connections
- ✓ Machine foundations
- ✓ Fixing bracket
- ✓ Ladders
- ✓ Cable trays

MAX express anchor – galvanized steel

Ref. no.	Type	Thread size	Drilling diameter d_0 [mm]	Drilling depth[1] h_2 [mm]	Dimensions l [mm]	Dimensions SW	Packing unit [pieces]	Weight approx. [kg/100 pcs]	Price plus RTZ [EUR/100 pcs]
396810	**MAX 8/10/75**	M 8	8	65	75	13	100	3.07	**79.40**
439148	**MAX 8/50/115**	M 8	8	105	115	13	100	4.37	**111.00**
396811	**MAX 10/10/95**	M 10	10	85	95	17	50	6.25	**100.50**
396812	**MAX 10/20/105**	M 10	10	95	105	17	50	6.67	**110.00**
439159	**MAX 10/30/115**	M 10	10	105	115	17	50	7.11	**127.00**
439160	**MAX 10/50/135**	M 10	10	125	135	17	50	8.31	**153.50**
396813	**MAX 12/10/110**	M 12	12	100	110	19	20	10.22	**149.50**
396814	**MAX 12/20/120**	M 12	12	110	120	19	20	10.93	**158.00**
439163	**MAX 12/30/130**	M 12	12	120	130	19	20	11.63	**171.50**
439170	**MAX 12/50/150**	M 12	12	140	150	19	20	13.04	**223.50**
396815	**MAX 16/25/148**	M 16	16	135	148	24	20	23.77	**361.00**
396816	**MAX 16/50/173**	M 16	16	160	173	24	20	27.11	**406.00**
439164	**MAX 16/100/223**	M 16	16	210	223	24	10	33.44	**560.00**
439166	**MAX 16/250/373**	M 16	16	360	373	24	10	58.86	**1.101.00**
396817	**MAX 20/30/172**	M 20	20	155	172	30	10	45.49	**973.00**
396818	**MAX 20/60/202**	M 20	20	185	202	30	10	51.40	**1.135.00**

[1] Minimum drill hole depth for push-through installation

MAX express anchor – stainless steel

Ref. no.	Type	Thread size	Drilling diameter	Drilling depth[1]	Dimensions		Packing unit	Weight approx.	Price plus RTZ
			d_0 [mm]	h_2 [mm]	l [mm]	SW	[pieces]	[kg/100 pcs]	[EUR/100 pcs]
396823	MAX 8/10/75 R	M 8	8	65	75	13	50	3.00	**214.00**
482341	MAX 8/30/95 R	M 8	8	85	95	13	50	3.61	**274.50**
439167	MAX 8/50/115 R	M 8	8	105	115	13	50	4.18	**311.00**
396824	MAX 10/10/95 R	M 10	10	85	95	17	50	5.99	**277.50**
396825	MAX 10/20/105 R	M 10	10	95	105	17	50	6.48	**306.00**
439168	MAX 10/30/115 R	M 10	10	105	115	17	50	6.94	**358.00**
424864	MAX 10/50/135 R	M 10	10	125	135	17	50	7.92	**479.00**
396826	MAX 12/10/110 R	M 12	12	100	110	19	20	10.00	**451.00**
396827	MAX 12/20/120 R	M 12	12	110	120	19	20	10.64	**479.00**
439169	MAX 12/30/130 R	M 12	12	120	130	19	20	11.35	**543.00**
424863	MAX 12/50/150 R	M 12	12	140	150	19	20	12.78	**712.00**
455148	MAX 12/100/200 R	M 12	8	190	200	13	50	16.31	**989.00**
396828	MAX 16/25/148 R	M 16	16	135	148	24	20	23.29	**1.010.00**
396829	MAX 16/50/173 R	M 16	16	160	173	24	20	26.43	**1.467.00**
443307	MAX16/100/223 R	M 16	16	210	223	24	10	33.02	**1.777.00**
396830	MAX 20/30/172 R	M 20	20	155	172	30	10	45.28	**2.644.00**
396831	MAX 20/60/202 R	M 20	20	185	202	30	10	51.57	**2.908.00**

[1] Minimum drill hole depth for push-through installation

MAX K express anchor – galvanized steel

Ref. no.	Type	Thread size	Drilling diameter	Drilling depth[1]	Dimensions		Packing unit	Weight approx.	Price plus RTZ
			d_0 [mm]	h_2 [mm]	l [mm]	SW	[pieces]	[kg/100 pcs]	[EUR/100 pcs]
396819	MAX 10/10/75 K	M 10	10	65	75	17	50	5.26	**95.30**
396820	MAX 10/20/85 K	M 10	10	75	85	17	25	5.88	**108.00**
396821	MAX 12/10/90 K	M 12	12	80	90	19	20	8.84	**133.50**
396822	MAX 12/20/100 K	M 12	12	90	100	19	20	9.54	**147.00**

[1] Minimum drill hole depth for push-through installation

MAX K express anchor – stainless steel

Ref. no.	Type	Thread size	Drilling diameter	Drilling depth[1]	Dimensions		Packing unit	Weight approx.	Price plus RTZ
			d_0 [mm]	h_2 [mm]	l [mm]	SW	[pieces]	[kg/100 pcs]	[EUR/100 pcs]
396832	MAX 10/10/75 K R	M 10	10	65	75	17	50	5.08	**263.50**
396833	MAX 10/20/85 K R	M 10	10	75	85	17	50	5.57	**288.00**
396834	MAX 12/10/90 K R	M 12	12	80	90	19	20	8.66	**455.00**
396835	MAX 12/20/100 K R	M 12	12	90	100	19	20	9.38	**481.00**

[1] Minimum drill hole depth for push-through installation

IMC express anchor

Use

- Bolt anchor as fastener for a wide variety of applications in concrete construction, for non-cracked concrete as well as natural stone with a dense structure
- Approved for concrete C20/25 to C50/60
- Set drill hole, clean drill hole.
- Insert the anchor into the hole through the part to be fastened using a hammer, spread the anchor with assembly torque $T_{inst.}$
- Visual inspection – ready
- Short version "K" with reduced anchoring depth

Your advantages

- Time-saving push-through installation
- High flexibility through variable anchoring depths
- Assembly requires no additional dowels
- High resistances according to European approval
- Fire resistance class R120 according to test report

Component recommendation

✓ Cable trays ✓ Railing ✓ Steelwork connections

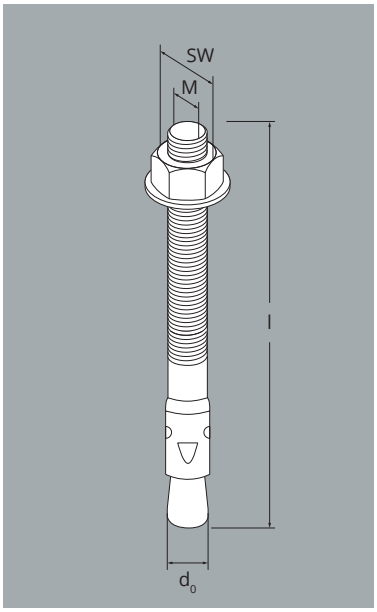

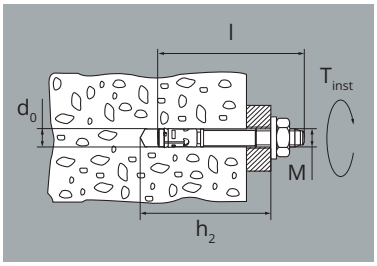

IMC express anchor – galvanized steel

Ref. no.	Type	Thread size	Drilling diameter	Drilling depth[1]	Dimensions		Packing unit	Weight approx.	Price plus RTZ
			d_0 [mm]	h_2 [mm]	l [mm]	SW	[pieces]	[kg/100 pcs]	[EUR/100 pcs]
396836	**IMC 8/10/70**	M 8	8	66	71	13	100	2.87	**56.10**
396837	**IMC 8/20/80**	M 8	8	76	81	13	100	3.19	**61.40**
396838	**IMC 10/10/85**	M 10	10	78	86	17	50	5.57	**71.00**
404543	**IMC 10/10/95**	M 10	10	88	96	17	50	6.03	**79.40**
404544	**IMC 12/10/104**	M 12	12	95	106	19	20	9.81	**116.50**
404545	**IMC 12/20/114**	M 12	12	105	116	19	20	10.58	**122.00**
404547	**IMC 16/25/143**	M 16	16	129	145	24	20	23.11	**257.50**
404548	**IMC 16/50/168**	M 16	16	154	170	24	20	26.23	**323.00**
404549	**IMC 20/30/187**	M 20	20	165	184	30	10	46.19	**730.00**
404550	**IMC 20/60/217**	M 20	20	195	214	30	10	52.18	**829.00**

[1] Minimum drill hole depth for push-through installation

IMC K express anchor – galvanized steel

Ref. no.	Type	Thread size	Drilling diameter	Drilling depth[1]	Dimensions		Packing unit	Weight approx.	Price plus RTZ
			d_0 [mm]	h_2 [mm]	l [mm]	SW	[pieces]	[kg/100 pcs]	[EUR/100 pcs]
404546	**IMC 16/15/118 K**	M 16	16	104	120	24	20	19.81	**226.50**

[1] Minimum drill hole depth for push-through installation

IMC express anchor – stainless steel

Ref. no.	Type	Thread size	Drilling diameter d_0 [mm]	Drilling depth[1] h_2 [mm]	Dimensions l [mm]	Dimensions SW	Packing unit [pieces]	Weight approx. [kg/100 pcs]	Price plus RTZ [EUR/100 pcs]
404551	**IMC 8/10/70 R**	M 8	8	66	71	13	100	2.80	**198.00**
404552	**IMC 10/10/85 R**	M 10	10	78	86	17	50	5.42	**254.00**
404553	**IMC 10/20/95 R**	M 10	10	88	96	17	50	5.88	**284.00**
404554	**IMC 12/10/104 R**	M 12	12	95	106	19	20	9.68	**448.00**
404555	**IMC 12/20/114**	M 12	12	105	116	19	20	10.33	**498.00**
404556	**IMC 16/25/143 R**	M 16	16	129	145	24	10	22.82	**879.00**
404557	**IMC 16/50/168 R**	M 16	16	154	170	24	10	26.00	**1.163.00**

[1] Minimum drill hole depth for push-through installation

Standard parts

Useful standard parts for fastening or assembly.
Combinable with many Pfeifer products.

Standard parts

Bolts, nuts and washers

Hexagon Head Bolt 140
Hexagon nut 140
Washer 140

Standard parts

Use

- High-quality fasteners according to applicable standards
- Supplements for many PFEIFER products or alternative uses

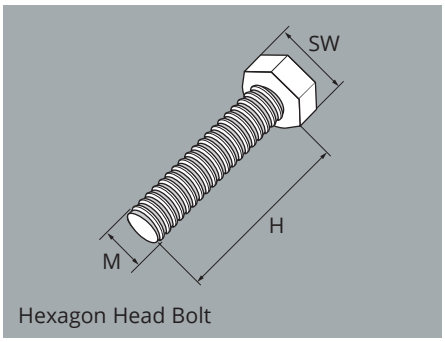

Hexagon Head Bolt

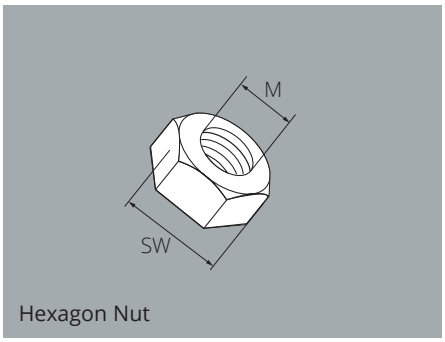

Hexagon Nut

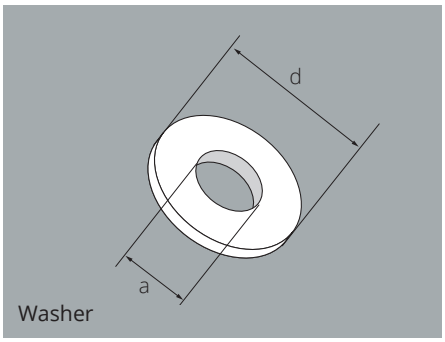

Washer

Hexagon Head Bolt – galvanized steel

Ref. no.	Type	Thread size	Dimensions		Packing unit	Weight approx.	Price plus RTZ
			H [mm]	SW	[pieces]	[kg/pcs]	[EUR/pcs]
289061	**BSC-12**	M 12	95	19	50	0.08	**0.72**
275209	**BSC-16**	M 16	95	24	25	0.19	**1.03**

Hexagon Head Bolt – stainless steel

Ref. no.	Type	Thread size	Dimensions		Packing unit	Weight approx.	Price plus RTZ
			H [mm]	SW	[pieces]	[kg/100 pcs]	[EUR/pcs]
272212	**SKS-VA-16**	M 16	30	24	25	7.69	**2.36**

Hexagon Nut – stainless steel

Ref. no.	Type	Thread size	Dimension	Packing unit	Weight approx.	Price plus RTZ
			SW	[pieces]	[kg/100 pcs]	[EUR/pcs]
371745	**SKM-VA-16**	M 16	24	100	3.33	**1.72**

Washer – stainless steel

Ref. no.	Type	Dimensions		Packing unit	Weight approx.	Price plus RTZ
		d [mm]	a [mm]	[pieces]	[kg/100 pcs]	[EUR/pcs]
272215	**US-VA-16**	30	17	200	1.13	**0.38**

Anchor Plates

Anchor Plates consist of a steel plate with welded-on headed studs and are used to connect steel components with precast concrete elements. The Anchor Plates are set in concrete in the concrete element, with the headed studs serving as anchors. When installed, the steel plate is free of concrete and flush with the surface, making it possible to weld on a steel component.

Your advantages

- Various plate sizes and anchoring depths
- Headed stud with European Technical Assessment (ETA)
- Ultrasonic testing as well as proven Z grades of the steel plate available on request
- Quickly deliverable stock items

More information can be found at
www.pfeifer.info/anchor-plates

Anchor Plates

APL Anchor Plate 144

Dimensioning software now
download free of charge at:
www.koeco.net

APL Anchor Plate

Use

- For fastening steel components to concrete elements
- Anchor Plates consist of a steel plate with welded-on headed studs and are embedded in concrete in the concrete element. The headed studs serve as anchorage. In the installed state, the steel plate is flush with the surface with one side free of concrete. A steel component can be welded to this side.

Your advantages

- Various plate sizes and anchoring depths – in stock
- Headed stud with European Technical Assessment (ETA)
- Ultrasonic testing as well as proven Z grades of the steel plate available on request
- ISO 9001 certified production with welding certificate according to EN 1090-2
- Free dimensioning software (Köco)
- Different surface treatments available (black steel, hot-dip galvanized or painted)
- Special solutions can be achieved on time and on request
- Nail holes (= 6 mm) for formwork fixing

Component recommendation

✓ Precast wall ✓ Column/rod-shaped component ✓ Room module/garage

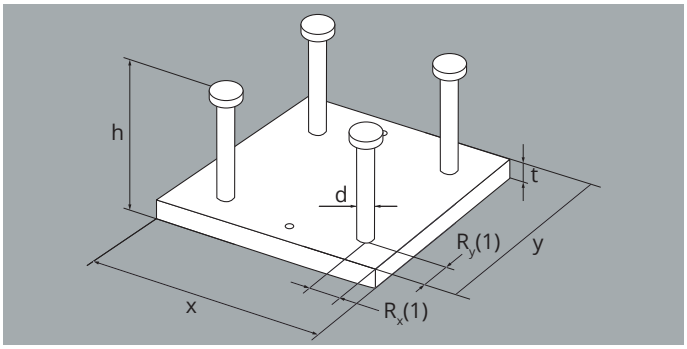

APL Anchor Plate – painted steel base plate

Ref. no.	Type	Dimensions							Number of bolts	Weight approx.	Price plus RTZ
		x [mm]	y [mm]	t [mm]	h [mm]	$R_x(1)$ [mm]	$R_y(1)$ [mm]	d [mm]	n [pieces]	[kg/pcs]	[EUR/pcs]
420507	APL-50x100x8-58-2x13-S355-p	100	50	8	58	25	15	13	2	0.47	on request
420512	APL-50x100x8-83-2x13-S355-p	100	50	8	83	25	15	13	2	0.52	on request
420513	APL-50x100x8-108-2x13-S355-p	100	50	8	108	25	15	13	2	0.63	on request
420514	APL-100x100x8-58-4x13-S355-p	100	100	8	58	15	15	13	4	0.94	on request
420515	APL-100x100x8-83-4x13-S355-p	100	100	8	83	15	15	13	4	1.04	on request
420516	APL-100x100x8-108-4x13-S355-p	100	100	8	108	15	15	13	4	1.25	on request
420517	APL-100x150x10-60-4x13-S355-p	150	100	10	60	15	30	13	4	1.49	on request
420518	APL-100x150x10-85-4x13-S355-p	150	100	10	85	15	30	13	4	1.59	on request
420519	APL-100x150x10-110-4x13-S355-p	150	100	10	110	15	30	13	4	1.80	on request
420520	APL-100x200x12-62-4x13-S355-p	200	100	12	62	15	40	13	4	2.19	on request
420521	APL-100x200x12-87-4x13-S355-p	200	100	12	87	15	40	13	4	2.30	on request
420522	APL-100x200x12-112-4x13-S355-p	200	100	12	112	15	40	13	4	2.51	on request

CE

APL Anchor Plate – painted steel base plate

Ref. no.	Type	Dimensions							Number of bolts	Weight approx.	Price plus RTZ
		x [mm]	y [mm]	t [mm]	h [mm]	R_x(1) [mm]	R_y(1) [mm]	d [mm]	n [pieces]	[kg/pcs]	[EUR/pcs]
420523	APL-100x200x12-162-4x13-S355-p	200	100	12	162	15	40	13	4	2.71	on request
420524	APL-120x300x15-165-4x16-S355-p	300	120	15	165	20	60	16	4	5.36	on request
420525	APL-150x150x10-60-4x13-S355-p	150	150	10	60	30	30	13	4	2.08	on request
420526	APL-150x150x10-85-4x13-S355-p	150	150	10	85	30	30	13	4	2.18	on request
420527	APL-150x150x10-110-4x13-S355-p	150	150	10	110	30	30	13	4	2.39	on request
420528	APL-150x150x12-162-4x13-S355-p	150	150	12	162	30	30	13	4	2.95	on request
420529	APL-200x200x12-62-4x13-S355-p	200	200	12	62	40	40	13	4	4.08	on request
420530	APL-200x200x12-87-4x13-S355-p	200	200	12	87	40	40	13	4	4.18	on request
420531	APL-200x200x12-112-4x13-S355-p	200	200	12	112	40	40	13	4	4.39	on request
420532	APL-200x200x12-162-4x16-S355-p	200	200	12	162	40	40	16	4	4.89	on request
420533	APL-200x300x15-165-4x16-S355-p	300	200	15	165	40	60	16	4	8.18	on request
420534	APL-250x250x15-165-4x16-S355-p	250	250	15	165	40	40	16	4	8.48	on request
420535	APL-300x300x15-165-4x16-S355-p	300	300	15	165	60	60	16	4	11.72	on request

CE

APL Anchor Plate – hot-dip galvanized steel

Ref. no.	Type	Dimensions							Number of bolts	Weight approx.	Price plus RTZ
		x [mm]	y [mm]	t [mm]	h [mm]	R_x(1) [mm]	R_y(1) [mm]	d [mm]	n [pieces]	[kg/pcs]	[EUR/pcs]
420554	APL-50x100x8-58-2x13-S355-tzn	100	50	8	58	25	15	13	2	0.47	on request
420555	APL-50x100x8-83-2x13-S355-tzn	100	50	8	83	25	15	13	2	0.52	on request
420557	APL-50x100x8-108-2x13-S355-tzn	100	50	8	108	25	15	13	2	0.63	on request
420558	APL-100x100x8-58-4x13-S355-tzn	100	100	8	58	15	15	13	4	0.94	on request
420559	APL-100x100x8-83-4x13-S355-tzn	100	100	8	83	15	15	13	4	1.04	on request
420560	APL-100x100x8-108-4x13-S355-tzn	100	100	8	108	15	15	13	4	1.25	on request
420561	APL-100x150x10-60-4x13-S355-tzn	150	100	10	60	15	30	13	4	1.49	on request
420562	APL-100x150x10-85-4x13-S355-tzn	150	100	10	85	15	30	13	4	1.59	on request
420563	APL-100x150x10-110-4x13-S355-tzn	150	100	10	110	15	30	13	4	1.80	on request
420564	APL-100x200x12-62-4x13-S355-tzn	200	100	12	62	15	40	13	4	2.19	on request
420565	APL-100x200x12-87-4x13-S355-tzn	200	100	12	87	15	40	13	4	2.30	on request
420566	APL-100x200x12-112-4x13-S355-tzn	200	100	12	112	15	40	13	4	2.51	on request
420567	APL-100x200x12-162-4x13-S355-tzn	200	100	12	162	15	40	13	4	2.71	on request
420568	APL-120x300x15-165-4x16-S355-tzn	300	120	15	165	20	60	16	4	5.36	on request
420569	APL-150x150x10-60-4x13-S355-tzn	150	150	10	60	30	30	13	4	2.08	on request
420570	APL-150x150x10-85-4x13-S355-tzn	150	150	10	85	30	30	13	4	2.18	on request
420571	APL-150x150x10-110-4x13-S355-tzn	150	150	10	110	30	30	13	4	2.39	on request
420572	APL-150x150x12-162-4x13-S355-tzn	150	150	12	162	30	30	13	4	2.95	on request
420573	APL-200x200x12-62-4x13-S355-tzn	200	200	12	62	40	40	13	4	4.08	on request
420574	APL-200x200x12-87-4x13-S355-tzn	200	200	12	87	40	40	13	4	4.18	on request
420575	APL-200x200x12-112-4x13-S355-tzn	200	200	12	112	40	40	13	4	4.39	on request
420576	APL-200x200x12-162-4x16-S355-tzn	200	200	12	162	40	40	16	4	4.89	on request
420577	APL-200x300x15-165-4x16-S355-tzn	300	200	15	165	40	60	16	4	8.18	on request
420578	APL-250x250x15-165-4x16-S355-tzn	250	250	15	165	40	40	16	4	8.48	on request
420579	APL-300x300x15-165-4x16-S355-tzn	300	300	15	165	60	60	16	4	11.72	on request

CE

APL Anchor Plate – black steel

Ref. no.	Type	Dimensions							Number of bolts	Weight approx.	Price plus RTZ
		x [mm]	y [mm]	t [mm]	h [mm]	R_x(1) [mm]	R_y(1) [mm]	d [mm]	n [pieces]	[kg/pcs]	[EUR/pcs]
423426	APL-50x100x8-58-2x13-S355	100	50	8	58	25	15	13	2	0.49	on request
423427	APL-50x100x8-83-2x13-S355	100	50	8	83	25	15	13	2	0.52	on request
423428	APL-50x100x8-108-2x13-S355	100	50	8	108	25	15	13	2	0.63	on request
423429	APL-100x100x8-58-4x13-S355	100	100	8	58	15	15	13	4	0.94	on request
423430	APL-100x100x8-83-4x13-S355	100	100	8	83	15	15	13	4	1.04	on request
423431	APL-100x100x8-108-4x13-S355	100	100	8	108	15	15	13	4	1.25	on request
423432	APL-100x150x10-60-4x13-S355	150	100	10	60	15	30	13	4	1.49	on request
423433	APL-100x150x10-85-4x13-S355	150	100	10	85	15	30	13	4	1.59	on request
423434	APL-100x150x10-110-4x13-S355	150	100	10	110	15	30	13	4	1.80	on request
423435	APL-100x200x12-62-4x13-S355	200	100	12	62	15	40	13	4	2.19	on request
423436	APL-100x200x12-87-4x13-S355	200	100	12	87	15	40	13	4	2.30	on request
423437	APL-100x200x12-112-4x13-S355	200	100	12	112	15	40	13	4	2.51	on request
423438	APL-100x200x12-162-4x13-S355	200	100	12	162	15	40	13	4	2.71	on request
423439	APL-120x300x15-165-4x16-S355	300	120	15	165	20	60	16	4	5.36	on request
423440	APL-150x150x10-60-4x13-S355	150	150	10	60	30	30	13	4	2.08	on request
423441	APL-150x150x10-85-4x13-S355	150	150	10	85	30	30	13	4	2.18	on request
423442	APL-150x150x10-110-4x13-S355	150	150	10	110	30	30	13	4	2.39	on request
423443	APL-150x150x12-162-4x13-S355	150	150	12	162	30	30	13	4	2.95	on request
423444	APL-200x200x12-62-4x13-S355	200	200	12	62	40	40	13	4	4.08	on request
423445	APL-200x200x12-87-4x13-S355	200	200	12	87	40	40	13	4	4.18	on request
423446	APL-200x200x12-112-4x13-S355	200	200	12	112	40	40	13	4	4.39	on request
423447	APL-200x200x12-162-4x16-S355	200	200	12	162	40	40	16	4	4.89	on request
423448	APL-200x300x15-165-4x16-S355	300	200	15	165	40	60	16	4	8.18	on request
423449	APL-250x250x15-165-4x16-S355	250	250	15	165	40	40	16	4	8.48	on request
423450	APL-300x300x15-165-4x16-S355	300	300	15	165	60	60	16	4	11.72	on request

CE

Mounting

Fastener system for push-pull props p. 150

The fastener system is used for the correct fixing of push-pull props during the installation of double or precast walls. Approvals regulate a safe use of the system.

Fixing bracket system p. 166

The fixing bracket system was developed for the load-bearing corner connection of concrete elements. A defined interlocking of bracket and toothed washer allows regular loads to be transferred and geometrical tolerances to be absorbed in parallel.

Lift mounting anchor p. 174

The attachment points are used in lift construction for temporary loads such as the suspension of lift cabins or other objects during assembly and maintenance work. Load eyes are also suitable for attachment of the fitters' personal protective equipment.

Personal protection system p. 182

The attachment point for personal protective equipment is suitable for use on concrete components during assembly, installation and service work. This fastener therefore meets the highest safety requirements. The system consists of a DB attachment point, a PSA Eye Bolt and supplementary installation accessories.

Fastener for Push-Pull Props

The fastener system is used for the correct fixing of push-pull props during the installation of double or precast walls.Approvals regulate a safe use of the system.

Your advantages

- European Technical Assessments (ETA) for head and foot anchoring of angled braces
- Time savings at the construction site through advance planning
- MoFi-12 Robotic suitable for automated positioning during production of wall elements
- MoFi can be used with standard bolts

More information can be found at
www.pfeifer.info/mofi-anchor

Fastener for Push-Pull Props

Anchor and Screws

Fastener for push-pull props, MoFi 152
MoFi fastener for push-pull props, assembled 153
Fixing bolt for MoFi 154
Concrete screws for fasteners for push-pull props 155
Bolt anchors for fasteners for push-pull props 156
Magnet Fixing, MoFi 157

Accesories

Plastic Fixing. MoFi 158
Plug. MoFi 159

Technical information

Dimensioning tables – MoFi 160

Fastener for push-pull props MoFi

Use

- Fastening point for push-pull props during the assembly
- Installation in the surface of concrete double walls or precast walls
- Absorption of loads from wind or light impact
- Steel thread is located deep in the anchor to prevent soiling of the thread flanks

Your advantages

- Standard thread – commercially available screws
- Screw lock – no unintentional loosening of screws
- Manual assembly possible as there is no minimum tightening torque
- Robotic – can be positioned using formwork robot (MoFi 12)
- Optimal backing in the wall shell due to collars (MoFi 12)
- Twist-resistant due to preformed braces
- Low minimum shell thickness/wall thickness – from 50 mm
- Can be used in cracked and non-cracked concrete
- Building authority approval, ETA approval, expert opinion for waterproof components

Component recommendation

✓ Double wall/semi-precast wall ✓ Precast wall ✓ Cellar wall made of impermeable concrete

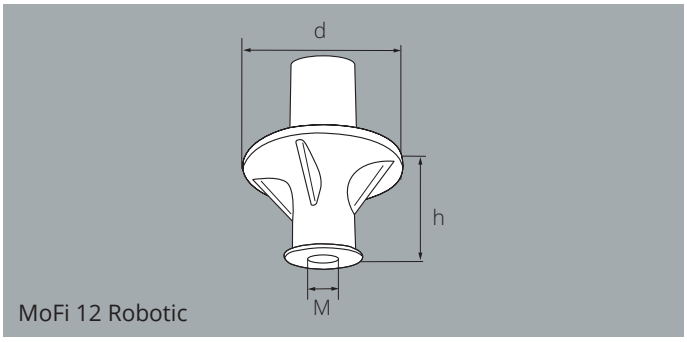

MoFi 12 Robotic

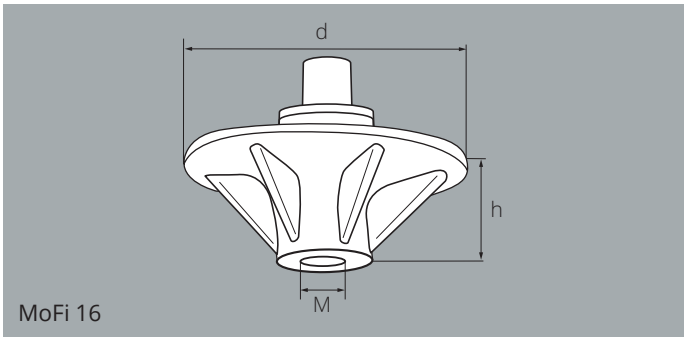

MoFi 16

Fastener for push-pull props MoFi – plastic

Ref. no.	Type	Colour coding	Thread size	Dimensions h [mm]	Dimensions d [mm]	Load carrier [pieces]	Packing unit [pieces]	Weight approx. [kg/100 pcs]	Price plus RTZ [EUR/pcs]
377027	**MoFi-12-Robotic**	yellow	M 12	45	65	2400	50	8.7	**3.95**
268510	**MoFi-16**	blue	M 16	45	120	800	50	23.00	**4.95**

[1] MoFi anchors are also available on enquiry in quantities of 4000 pieces, loosely packed in mesh boxes.

new

MoFi fastener for push-pull props assembled

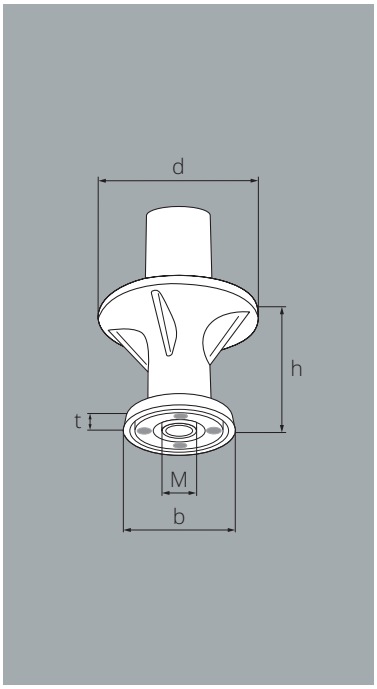

Use

- Fastening point for push-pull props during the assembly
- Installation in the surface of concrete double walls or precast walls
- Absorption of loads from wind or light impact
- Steel thread is located deep in the anchor to prevent soiling of the thread flanks

Your advantages

- Including pre-mounted formwork fixing by means of plastic fixing for attachment to steel, wood or plastic formwork by gluing, screwing or nailing
- Guarantee of the specified anchor embedding depth through the plastic fixing
- Standard thread – commercially available screws
- Screw lock – no unintentional loosening of screws
- Manual assembly possible as there is no minimum tightening torque
- Optimal backing in the wall shell due to collars (MoFi 12)
- Twist-resistant due to preformed braces
- Low minimum shell thickness/wall thickness – from 50 mm
- Can be used in cracked and non-cracked concrete
- Building authority approval, ETA approval, expert opinion for waterproof components

Component recommendation

✓ Double wall/semi-precast wall ✓ Precast wall ✓ Cellar wall made of impermeable concrete

MoFi fastener for push-pull props, assembled – plastic

Ref. no.	Type	Colour coding	Thread size	Dimensions				Load carrier	Packing unit	Weight approx.	Price plus RTZ
				h [mm]	d [mm]	b [mm]	t [mm]	[pieces]	[pieces]	[kg/100 pcs]	[EUR/pcs]
499263	**MoFi-12-RMO**	yellow	M 12	53	65	43	8	2000	2000	9.60	**on request**

Fixing bolt for MoFi

Use

- For mounting a push-pull prop on the MoFi
- Simple insertion of the fixing bolt into the internal thread in the MoFi
- No unwanted loosening of the bolt. thanks to the screw lock in the MoFi

Your advantages

- Guaranteed screw-in depth to match MoFi
- Reusable
- High strength material

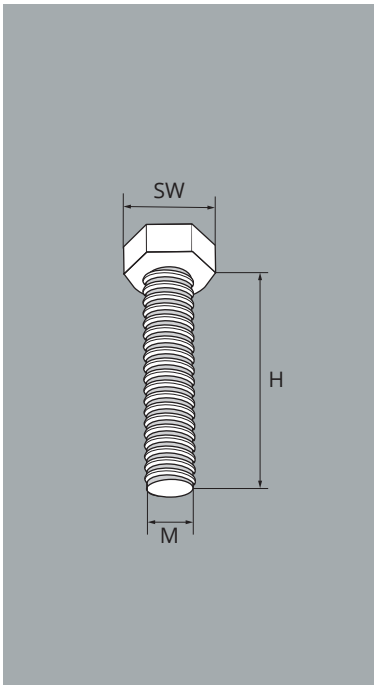

Fixing Bolt – galvanized steel – for MoFi

Ref. no.	Type	Thread size	Dimensions		Packing unit	Weight approx.	Price plus RTZ
			H [mm]	SW [mm]	[pieces]	[kg/pcs]	[EUR/pcs]
289061	**BSC-12**	M 12	95	18	50	0.08	**0.72**
275209	**BSC-16**	M 16	95	21	25	0.19	**1.03**

Concrete screws for fasteners for push-pull props

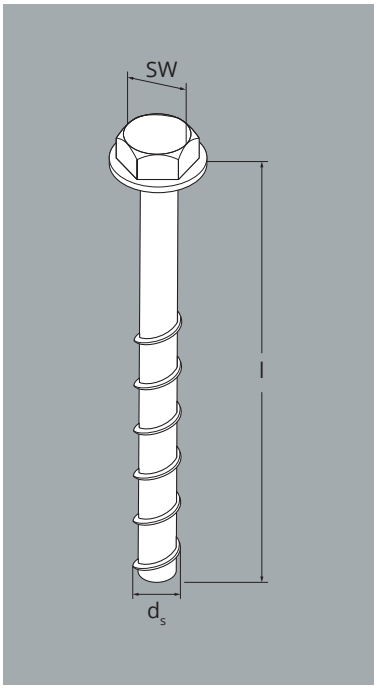

Use

- For ground anchoring of push-pull props
- Set drill hole, clean drill hole. Insert bolt through the part to be fastened. Visual inspection – ready
- UltraCut FBS II: Test reusability with optionally available test socket according to approval.

Your advantages

- Approved in cracked and non-cracked concrete
- Time-saving push-through installation
- Assembly requires no additional dowels
- Approval-compliant release/readjustment possible twice
- Minimum edge/axis distances, because expansion-free anchoring
- Dimensioning possible with the help of standardised tables
- European Technical Assessment (ETA)

Component recommendation

☑ Ground anchoring of push-pull props

UCS Concrete Screw – galvanized steel

Ref. no.	Type	Dimensions			Packing unit	Weight approx.	Price plus RTZ
		d_s [mm]	l_s [mm]	SW	[pieces]	[kg/100 pcs]	[EUR/100 pcs]
396797	**UCS 10x100 45/35/15-US**	12	100	15	50	7.76	**150.50**
396802	**UCS 14x125 60/40/10-US**	16	125	21	10	18.40	**392.00**

UltraCut FBS II concrete screw – galvanized steel

- Reusable according to approval[1)]
- Usable in young concrete from 10 N/mm²

Ref. no.	Type	Dimensions			Packing unit	Weight approx.	Price plus RTZ
		d_s [mm]	l_s [mm]	SW	[pieces]	[kg/100 pcs]	[EUR/100 pcs]
467879	**FBS II 10x100 45/35/15 US**	12	100	15	50	7.77	**on request**

[1)] Testing by means of optionally available FUP test socket is required each time before reuse. Refer to manufacturer's full assembly instructions at www.fischer.de!

FUP test socket – for UltraCut FBS II US concrete screw – steel

Ref. no.	Type	Passend für	Dimensions		Packing unit	Weight approx.	Price plus RTZ
			Innendurchmesser [mm]	Länge [mm]	[pieces]	[kg/100 pcs]	[EUR/100 pcs]
503439	**FUP 10**	FBS II 10	12	30	1	2.24	**on request**

Bolt anchors for fasteners for push-pull props

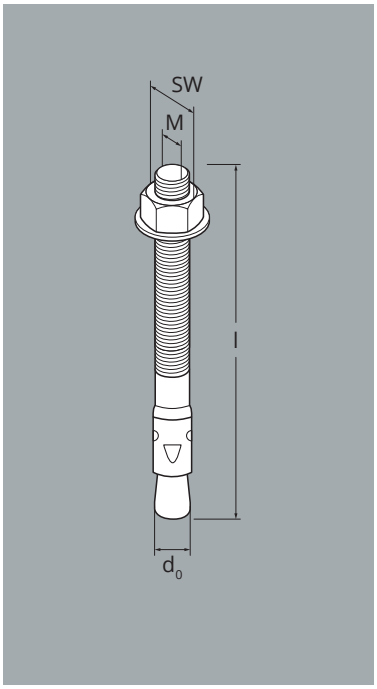

Use

- For ground anchoring of push-pull props
- Set drill hole, clean drill hole. Insert the anchor into the hole through the part to be fastened using a hammer, spread the anchor with assembly torque $_{Tinst.}$ Visual inspection – ready

Your advantages

- Approved in cracked and non-cracked concrete
- Time-saving push-through installation
- Assembly requires no additional dowels
- Low impact energy and short tightening travel
- Dimensioning possible with the help of standardised tables and the free DesignFix dimensioning software
- European Technical Assessment (ETA)

Component recommendation

✓ Ground anchoring of push-pull props

MAX express anchor – galvanized steel

Ref. no.	Type	Thread size	Drilling diameter	Dimensions		Packing unit	Weight approx.	Price plus RTZ
			d_0 [mm]	l [mm]	SW [mm]	[pieces]	[kg/100 pcs]	[EUR/100pcs]
396813	**MAX 12/10/110**	M 12	12	110	19	20	10.22	**149.50**
396815	**MAX 16/25/148**	M 16	16	135	24	20	23.77	**361.00**

new

Magnet Fixing MoFi

Use

- For fastening of MoFis to steel formwork
- Plugged or screwed versions available, selectable depending on the production process
- Plugged version combined with MoFi 12 Robotic suitable for automated positioning of anchors on the formwork

Your advantages

- Time saving process
- No drilling or welding of the formwork necessary
- Easy release of the magnets from the formwork by hexagon socket or thread
- Robust and durable
- Guarantee of the specified anchor embedding depth

- Low-maintenance as there are no rubber O-rings
- Can be placed by robot due to gripping pockets

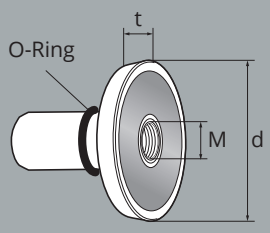

MoFi magnet fixing – inserted

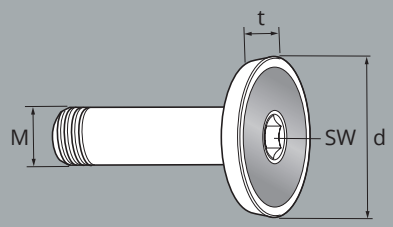

MoFi magnet fixing – screwed

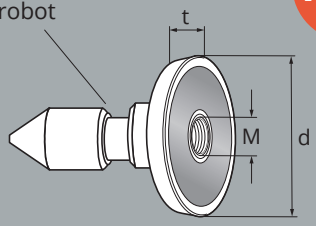

new

WLsystec® MoFi magnet fixing - inserted

Magnet fixing MoFi – galvanized steel

Ref. no.	Type	Execution	For anchor type	Thread size	Dimensions			Adhesive force	Packing unit	Weight approx.	Price plus RTZ
					d [mm]	t [mm]	SW [mm]	min [kg]	[pieces]	[kg/pcs]	[EUR/pcs]
330520	**MAM-12-GT**	**plugged**	**MoFi-12**	M 6	44	8	–	35	2	0.09	**57.10**
375160	**MAM-16-GT**	**plugged**	**MoFi-16**	M 8	52	8	–	50	2	0.16	**61.30**
300043	**MAM-12-GS**	**screwed**	**MoFi-12**	M 12	44	8	10	35	2	0.10	**59.20**
376638	**MAM-16-GS**	**screwed**	**MoFi-16**	M 16	52	8	10	50	2	0.18	**61.30**

Replacement O-ring DIN 3771 for magnet fixing MoFi, plugged – NBR rubber

Ref. no.	Type	For magnet type	Inner diameter	Schnur-stärke	Hardness grade	Packing unit	Weight approx.	Price plus RTZ
			[mm]	[mm]		[pieces]	[kg/100 pcs]	[EUR/100 pcs]
290903	**ORM-12**	**MAM-12-GT**	8	2.5	70 Shore A	100	0.10	**on request**
289522	**ORM-16**	**MAM-16-GT**	9	4.0	70 Shore A	100	0.10	**on request**

WLsystec® MoFi magnet fixing – nitrocarburised steel (surface-hardened)

Ref. no.	Type	Execution	For anchor type	Thread size	Dimensions		Adhesive force	Packing unit	Weight approx.	Price plus RTZ
					d [mm]	t [mm]	[kg]	[pieces]	[kg/pcs]	[EUR/pcs]
497135	**WLM-12-GT**	**plugged**	**MoFi-12**	M 8	44	8	50	25	0.09	**68.54**

Plastic Fixing MoFi

Use

- For fastening of MoFis to steel. wood or plastic formwork
- Can be attached to the formwork by gluing. screwing or nailing

Your advantages

- Flexible installation type
- Inexpensive formwork fixing
- Guarantee of the specified anchor embedding depth

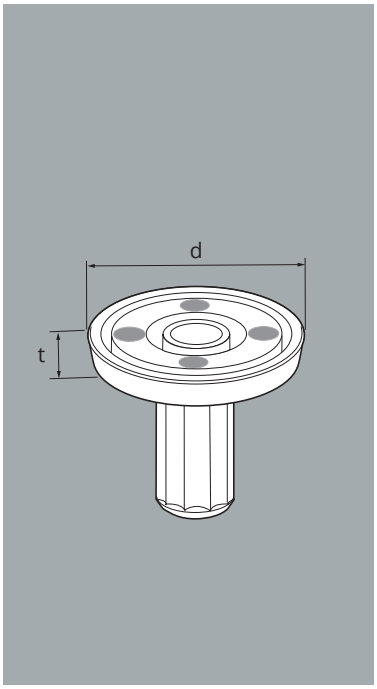

Plastic Fixing – plastic

Ref. no.	Type	Colour coding	For anchor type	Dimensions d [mm]	Dimensions t [mm]	Packing unit [pieces]	Weight approx. [kg/100 pcs]	Price plus RTZ [EUR/pcs]
287251	**KAM-12**	yellow	MoFi-12	43	8	50	1.00	**0.29**
270921	**KAM-16**	blue	MoFi-16	52	8	50	1.20	**0.31**

Plug MoFi

Use

- Permanent closure of fasteners for push-pull props MoFi
- Plastic plugs are simply pressed into the anchor
- Concrete plugs are glued into the anchor

Your advantages

- High quality exterior view
- Time-saving anchor closures
- Protection against corrosion

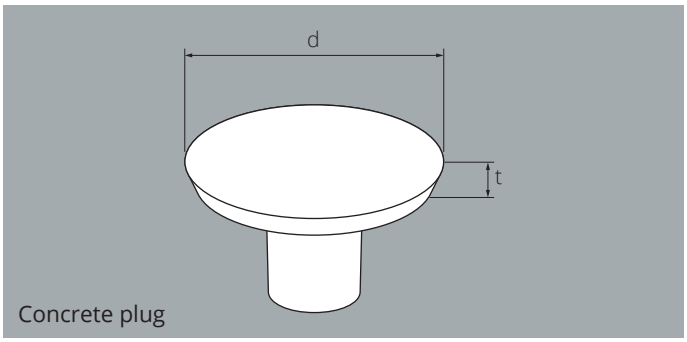

Concrete plug

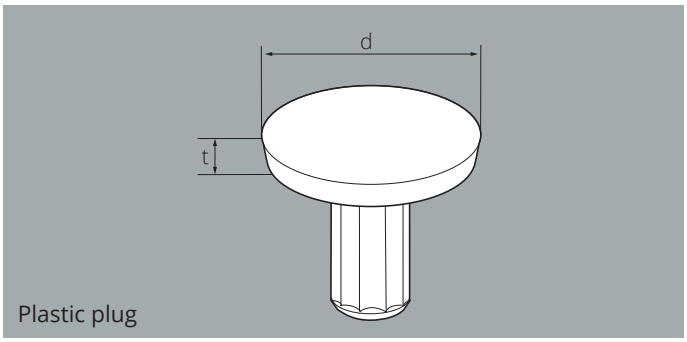

Plastic plug

Plugs – FLOWSTONE concrete – colour similar to RAL 7044

Ref. no.	Type	For anchor type	Dimensions		Packing unit	Weight approx.	Price plus RTZ
			d [mm]	t [mm]	[pieces]	[kg/100 pcs]	[EUR/pcs]
290593	**VSTM-B-12**	MoFi-12	42.7	7	50	2.00	**2.34**
278349	**VSTM-B-16**	MoFi-16	51.6	7	50	3.60	**2.44**

Plug – plastic

Ref. no.	Type	For anchor type	Dimensions		Packing unit	Weight approx.	Price plus RTZ
			d [mm]	t [mm]	[pieces]	[kg/100 pcs]	[EUR/pcs]
287287	**VSTM-K-12**	MoFi-12	43	8	50	0.60	**0.24**
273624	**VSTM-K-16**	MoFi-16	52	8	50	0.70	**0.26**

Dimensioning tables MoFi

The following tables can be used to quickly select the required anchor size and a suitable ground anchor.

Example of application

- Area double wall: 6.00 m x 3.00 m (l x h) = 18 m² ⑤
- Shell thickness: 50 mm
- Concrete compressive strength wall and floor: $f_{ck.cube}$ = 25 N/mm²
- Crack condition. wall: Non-cracked concrete
- Crack condition. floor: Cracked concrete
- Surface reinforcement: Q188
- Wind zone 2 – inland – h ≤ 10 m. gust velocity pressure: q_p = 0.65 kN/m² (according to DIN 1991-1-4/NA:2010-12. Table NA.B.3)
- Number of push-pull props: 2 pieces
- Push-pull prop angle (support angle): α = 45°
- Pressure coefficient: $c_{p.net}$ = 3.4 (related to a long straight wall. l/h ≥ 10. area A)
- State of construction. assembly period is between May and August (maximum 3 months) and assembly takes maximum 3 days. reduction: red_{wind} = 0.5 (according to DIN EN 1991-1-4/NA:2010-12. Table NA.B.5)
- No further relevant stresses during assembly (snow. earthquake. collision)
- Attachment thickness (thickness of the plate at the push-pull prop base): t_{fix} = 10 mm

Procedure

MoFi and concrete screw – wall. non-cracked concrete ①

	Wind zone 2 ②			
	Gust velocity pressure q_p = 0.65 kN/m²			
	Pressure coefficient $c_{p.net}$			
	2.3	2.3	3.4 ③	3.4
	Prop angle α			
Wall area in m²	45°	60°	45° ④	60°
4	2.38 kN → MoFi-12/UCS-10x100	3.36 kN → MoFi-12/UCS-10x100	3.52 kN → MoFi-12/UCS-10x100	4.97 kN → MoFi-12/UCS-10x100
6	3.57 kN → MoFi-12/UCS-10x100	5.05 kN → MoFi-12/UCS-10x100	5.27 kN → MoFi-12/UCS-10x100	7.46 kN → MoFi-12/UCS-10x100
8	4.76 kN → MoFi-12/UCS-10x100	6.73 kN → MoFi-12/UCS-10x100	7.03 kN → MoFi-12/UCS-10x100	9.94 kN → MoFi-12/UCS-10x100
10	5.95 kN → MoFi-12/UCS-10x100	8.41 kN → MoFi-12/UCS-10x100	8.79 kN → MoFi-12/UCS-10x100	12.43 kN → MoFi-12/UCS-10x100
⑤ 12	7.14 kN → MoFi-12/UCS-10x100	10.09 kN → MoFi-12/UCS-10x100	10.55 kN → MoFi-12/UCS-10x100	14.92 kN → MoFi-16/UCS-14x125
14	8.32 kN → MoFi-12/UCS-10x100	11.77 kN → MoFi-12/UCS-10x100	12.31 kN → MoFi-12/UCS-10x100	17.40 kN → MoFi-16/UCS-14x125
16	9.51 kN → MoFi-12/UCS-10x100	13.45 kN → MoFi-16/UCS-14x125	14.06 kN → MoFi-16/UCS-14x125	19.89 kN → MoFi-16/UCS-14x125
18	10.70 kN → MoFi-12/UCS-10x100	15.14 kN → MoFi-16/UCS-14x125	15.82 kN → MoFi-16/UCS-14x125	
20	11.89 kN → MoFi-12/UCS-10x100	16.82 kN → MoFi-16/UCS-14x125	17.58 kN → MoFi-16/UCS-14x125	
22	13.08 kN → MoFi-16/UCS-14x125	18.50 kN → MoFi-16/UCS-14x125	19.34 kN → MoFi-16/UCS-14x125	
24	14.27 kN → MoFi-16/UCS-14x125	20.18 kN → MoFi-16/UCS-14x125	21.10 kN → MoFi-16/UCS-14x125	
26	15.46 kN → MoFi-16/UCS-14x125	21.86 kN → MoFi-16/UCS-14x125		
28	16.65 kN → MoFi-16/UCS-14x125			
30	17.84 kN → MoFi-16/UCS-14x125			
32	19.03 kN → MoFi-16/UCS-14x125			

Intermediate values for the respective wall surface may be interpolated linearly

Selected:

- **2 x fasteners for push-pull props MoFi 16**
- **2 x concrete screw UCS-14x125Page**

MoFi and concrete screw – wall. non-cracked concrete

Wind zone 2					
Gust velocity pressure q_p = 0.65 kN/m²					
Pressure coefficient $c_{p.net}$		2.3	2.3	3.4	3.4
		Prop angle α			
		45°	60°	45°	60°
Wall area in m²	4	2.38 kN → MoFi-12/UCS-10x100	3.36 kN → MoFi-12/UCS-10x100	3.52 kN → MoFi-12/UCS-10x100	4.97 kN → MoFi-12/UCS-10x100
	6	3.57 kN → MoFi-12/UCS-10x100	5.05 kN → MoFi-12/UCS-10x100	5.27 kN → MoFi-12/UCS-10x100	7.46 kN → MoFi-12/UCS-10x100
	8	4.76 kN → MoFi-12/UCS-10x100	6.73 kN → MoFi-12/UCS-10x100	7.03 kN → MoFi-12/UCS-10x100	9.94 kN → MoFi-12/UCS-10x100
	10	5.95 kN → MoFi-12/UCS-10x100	8.41 kN → MoFi-12/UCS-10x100	8.79 kN → MoFi-12/UCS-10x100	12.43 kN → MoFi-12/UCS-10x100
	12	7.14 kN → MoFi-12/UCS-10x100	10.09 kN → MoFi-12/UCS-10x100	10.55 kN → MoFi-12/UCS-10x100	14.92 kN → MoFi-16/UCS-14x125
	14	8.32 kN → MoFi-12/UCS-10x100	11.77 kN → MoFi-12/UCS-10x100	12.31 kN → MoFi-12/UCS-10x100	17.40 kN → MoFi-16/UCS-14x125
	16	9.51 kN → MoFi-12/UCS-10x100	13.45 kN → MoFi-16/UCS-14x125	14.06 kN → MoFi-16/UCS-14x125	19.89 kN → MoFi-16/UCS-14x125
	18	10.70 kN → MoFi-12/UCS-10x100	15.14 kN → MoFi-16/UCS-14x125	15.82 kN → MoFi-16/UCS-14x125	
	20	11.89 kN → MoFi-12/UCS-10x100	16.82 kN → MoFi-16/UCS-14x125	17.58 kN → MoFi-16/UCS-14x125	
	22	13.08 kN → MoFi-16/UCS-14x125	18.50 kN → MoFi-16/UCS-14x125	19.34 kN → MoFi-16/UCS-14x125	
	24	14.27 kN → MoFi-16/UCS-14x125	20.18 kN → MoFi-16/UCS-14x125	21.10 kN → MoFi-16/UCS-14x125	
	26	15.46 kN → MoFi-16/UCS-14x125	21.86 kN → MoFi-16/UCS-14x125		
	28	16.65 kN → MoFi-16/UCS-14x125			
	30	17.84 kN → MoFi-16/UCS-14x125			
	32	19.03 kN → MoFi-16/UCS-14x125			

Intermediate values for the respective wall surface may be interpolated linearly

Wind zone 3					
Gust velocity pressure q_p = 0.80 kN/m²					
Pressure coefficient $c_{p.net}$		2.3	2.3	3.4	3.4
		Prop angle α			
		45°	60°	45°	60°
Wall area in m²	4	2.93 kN → MoFi-12/UCS-10x100	4.14 kN → MoFi-12/UCS-10x100	4.33 kN → MoFi-12/UCS-10x100	6.12 kN → MoFi-12/UCS-10x100
	6	4.39 kN → MoFi-12/UCS-10x100	6.21 kN → MoFi-12/UCS-10x100	6.49 kN → MoFi-12/UCS-10x100	9.18 kN → MoFi-12/UCS-10x100
	8	5.85 kN → MoFi-12/UCS-10x100	8.28 kN → MoFi-12/UCS-10x100	8.65 kN → MoFi-12/UCS-10x100	12.24 kN → MoFi-12/UCS-10x100
	10	7.32 kN → MoFi-12/UCS-10x100	10.35 kN → MoFi-12/UCS-10x100	10.82 kN → MoFi-12/UCS-10x100	15.3 kN → MoFi-16/UCS-14x125
	12	8.78 kN → MoFi-12/UCS-10x100	12.42 kN → MoFi-12/UCS-10x100	12.98 kN → MoFi-12/UCS-10x100	18.36 kN → MoFi-16/UCS-14x125
	14	10.25 kN → MoFi-12/UCS-10x100	14.49 kN → MoFi-16/UCS-14x125	15.15 kN → MoFi-16/UCS-14x125	21.42 kN → MoFi-16/UCS-14x125
	16	11.7 kN → MoFi-12/UCS-10x100	16.56 kN → MoFi-16/UCS-14x125	17.31 kN → MoFi-16/UCS-14x125	
	18	13.17 kN → MoFi-16/UCS-14x125	18.63 kN → MoFi-16/UCS-14x125	19.47 kN → MoFi-16/UCS-14x125	
	20	14.64 kN → MoFi-16/UCS-14x125	20.70 kN → MoFi-16/UCS-14x125	21.64 kN → MoFi-16/UCS-14x125	
	22	16.10 kN → MoFi-16/UCS-14x125			
	24	17.56 kN → MoFi-16/UCS-14x125			
	26	19.03 kN → MoFi-16/UCS-14x125			
	28	20.49 kN → MoFi-16/UCS-14x125			
	30	21.96 kN → MoFi-16/UCS-14x125			
	32				

Intermediate values for the respective wall surface may be interpolated linearly

Designation of concrete screw:

Screw diameter x screw length

Note:

All UCS-10x100 concrete screws are replaceable by Fischer UltraCut FBS II 10x100.

MoFi and bolt anchor – wall. non-cracked concrete

Wall area in m²	Wind zone 2 Gust velocity pressure q_p = 0.65 kN/m² Pressure coefficient $c_{p.net}$			
	2.3	2.3	3.4	3.4
	Prop angle α			
	45°	60°	45°	60°
4	2.38 kN → MoFi-12/MAX-12/10/110	3.36 kN → MoFi-12/MAX-12/10/110	3.52 kN → MoFi-12/MAX-12/10/110	4.97 kN → MoFi-12/MAX-12/10/110
6	3.57 kN → MoFi-12/MAX-12/10/110	5.05 kN → MoFi-12/MAX-12/10/110	5.27 kN → MoFi-12/MAX-12/10/110	7.46 kN → MoFi-12/MAX-12/10/110
8	4.76 kN → MoFi-12/MAX-12/10/110	6.73 kN → MoFi-12/MAX-12/10/110	7.03 kN → MoFi-12/MAX-12/10/110	9.94 kN → MoFi-12/MAX-12/10/110
10	5.95 kN → MoFi-12/MAX-12/10/110	8.41 kN → MoFi-12/MAX-12/10/110	8.79 kN → MoFi-12/MAX-12/10/110	12.43 kN → MoFi-16/MAX-16/25/148
12	7.14 kN → MoFi-12/MAX-12/10/110	10.09 kN → MoFi-12/MAX-12/10/110	10.55 kN → MoFi-12/MAX-12/10/110	14.92 kN → MoFi-16/MAX-16/25/148
14	8.32 kN → MoFi-12/MAX-12/10/110	11.77 kN → MoFi-16/MAX-16/25/148	12.31 kN → MoFi-16/MAX-16/25/148	17.40 kN → MoFi-16/MAX-16/25/148
16	9.51 kN → MoFi-12/MAX-12/10/110	13.45 kN → MoFi-16/MAX-16/25/148	14.06 kN → MoFi-16/MAX-16/25/148	19.89 kN → MoFi-16/MAX-16/25/148
18	10.70 kN → MoFi-12/MAX-12/10/110	15.14 kN → MoFi-16/MAX-16/25/148	15.82 kN → MoFi-16/MAX-16/25/148	
20	11.89 kN → MoFi-16/MAX-16/25/148	16.82 kN → MoFi-16/MAX-16/25/148	17.58 kN → MoFi-16/MAX-16/25/148	
22	13.08 kN → MoFi-16/MAX-16/25/148	18.50 kN → MoFi-16/MAX-16/25/148	19.34 kN → MoFi-16/MAX-16/25/148	
24	14.27 kN → MoFi-16/MAX-16/25/148	20.18 kN → MoFi-16/MAX-16/25/148		
26	15.46 kN → MoFi-16/MAX-16/25/148			
28	16.65 kN → MoFi-16/MAX-16/25/148			
30	17.84 kN → MoFi-16/MAX-16/25/148			
32	19.03 kN → MoFi-16/MAX-16/25/148			

Intermediate values for the respective wall surface may be interpolated linearly

Wall area in m²	Wind zone 3 Gust velocity pressure q_p = 0.80 kN/m² Pressure coefficient $c_{p.net}$			
	2.3	2.3	3.4	3.4
	Prop angle α			
	45°	60°	45°	60°
4	2.93 kN → MoFi-12/MAX-12/10/110	4.14 kN → MoFi-12/MAX-12/10/110	4.33 kN → MoFi-12/MAX-12/10/110	6.12 kN → MoFi-12/MAX-12/10/110
6	4.39 kN → MoFi-12/MAX-12/10/110	6.21 kN → MoFi-12/MAX-12/10/110	6.49 kN → MoFi-12/MAX-12/10/110	9.18 kN → MoFi-12/MAX-12/10/110
8	5.85 kN → MoFi-12/MAX-12/10/110	8.28 kN → MoFi-12/MAX-12/10/110	8.65 kN → MoFi-12/MAX-12/10/110	12.24 kN → MoFi-16/MAX-16/25/148
10	7.32 kN → MoFi-12/MAX-12/10/110	10.35 kN → MoFi-12/MAX-12/10/110	10.82 kN → MoFi-12/MAX-12/10/110	15.3 kN → MoFi-16/MAX-16/25/148
12	8.78 kN → MoFi-12/MAX-12/10/110	12.42 kN → MoFi-16/MAX-16/25/148	12.98 kN → MoFi-16/MAX-16/25/148	18.36 kN → MoFi-16/MAX-16/25/148
14	10.25 kN → MoFi-12/MAX-12/10/110	14.49 kN → MoFi-16/MAX-16/25/148	15.15 kN → MoFi-16/MAX-16/25/148	
16	11.71 kN → MoFi-16/MAX-16/25/148	16.56 kN → MoFi-16/MAX-16/25/148	17.31 kN → MoFi-16/MAX-16/25/148	
18	13.17 kN → MoFi-16/MAX-16/25/148	18.63 kN → MoFi-16/MAX-16/25/148	19.47 kN → MoFi-16/MAX-16/25/148	
20	14.64 kN → MoFi-16/MAX-16/25/148	20.70 kN → MoFi-16/MAX-16/25/148		
22	16.10 kN → MoFi-16/MAX-16/25/148			
24	17.56 kN → MoFi-16/MAX-16/25/148			
26	19.03 kN → MoFi-16/MAX-16/25/148			
28	20.49 kN → MoFi-16/MAX-16/25/148			
30				
32				

Intermediate values for the respective wall surface may be interpolated linearly

Designation of bolt anchor:

diameter/thickness of attachments/length

MoFi and concrete screw – wall. non-cracked concrete

Wind zone 2					
Gust velocity pressure q_p = 0.65 kN/m²					
Pressure coefficient $c_{p.net}$		2.3	2.3	3.4	3.4
Prop angle α		45°	60°	45°	60°
Wall area in m²	4	2.38 kN → MoFi-12/UCS-10x100	3.36 kN → MoFi-12/UCS-10x100	3.52 kN → MoFi-12/UCS-10x100	4.97 kN → MoFi-12/UCS-10x100
	6	3.57 kN → MoFi-12/UCS-10x100	5.05 kN → MoFi-12/UCS-10x100	5.27 kN → MoFi-12/UCS-10x100	7.46 kN → MoFi-12/UCS-10x100
	8	4.76 kN → MoFi-12/UCS-10x100	6.73 kN → MoFi-12/UCS-10x100	7.03 kN → MoFi-12/UCS-10x100	9.94 kN → MoFi-16/UCS-14x125
	10	5.95 kN → MoFi-12/UCS-10x100	8.41 kN → MoFi-12/UCS-10x100	8.79 kN → MoFi-12/UCS-10x100	12.43 kN → MoFi-16/UCS-14x125
	12	7.14 kN → MoFi-12/UCS-10x100	10.09 kN → MoFi-16/UCS-14x125	10.55 kN → MoFi-16/UCS-14x125	14.92 kN → MoFi-16/UCS-14x125
	14	8.32 kN → MoFi-12/UCS-10x100	11.77 kN → MoFi-16/UCS-14x125	12.31 kN → MoFi-16/UCS-14x125	
	16	9.51 kN → MoFi-16/UCS-14x125	13.45 kN → MoFi-16/UCS-14x125	14.06 kN → MoFi-16/UCS-14x125	
	18	10.70 kN → MoFi-16/UCS-14x125	15.14 kN → MoFi-16/UCS-14x125		
	20	11.89 kN → MoFi-16/UCS-14x125			
	22	13.08 kN → MoFi-16/UCS-14x125			
	24	14.27 kN → MoFi-16/UCS-14x125			
	26	15.46 kN → MoFi-16/UCS-14x125			
	28				
	30				
	32				

Intermediate values for the respective wall surface may be interpolated linearly

Wind zone 3					
Gust velocity pressure q_p = 0.80 kN/m²					
Pressure coefficient $c_{p.net}$		2.3	2.3	3.4	3.4
Prop angle α		45°	60°	45°	60°
Wall area in m²	4	2.93 kN → MoFi-12/UCS-10x100	4.14 kN → MoFi-12/UCS-10x100	4.33 kN → MoFi-12/UCS-10x100	6.12 kN → MoFi-12/UCS-10x100
	6	4.39 kN → MoFi-12/UCS-10x100	6.21 kN → MoFi-12/UCS-10x100	6.49 kN → MoFi-12/UCS-10x100	9.18 kN → MoFi-12/UCS-10x100
	8	5.85 kN → MoFi-12/UCS-10x100	8.28 kN → MoFi-12/UCS-10x100	8.65 kN → MoFi-12/UCS-10x100	12.24 kN → MoFi-16/UCS-14x125
	10	7.32 kN → MoFi-12/UCS-10x100	10.35 kN → MoFi-16/UCS-14x125	10.82 kN → MoFi-16/UCS-14x125	15.3 kN → MoFi-16/UCS-14x125
	12	8.78 kN → MoFi-12/UCS-10x100	12.42 kN → MoFi-16/UCS-14x125	12.98 kN → MoFi-16/UCS-14x125	
	14	10.25 kN → MoFi-16/UCS-14x125	14.49 kN → MoFi-16/UCS-14x125	15.15 kN → MoFi-16/UCS-14x125	
	16	11.71 kN → MoFi-16/UCS-14x125			
	18	13.17 kN → MoFi-16/UCS-14x125			
	20	14.64 kN → MoFi-16/UCS-14x125			
	22				
	24				
	26				
	28				
	30				
	32				

Intermediate values for the respective wall surface may be interpolated linearly

Designation of concrete screw:

Designation of concrete screw:

Note:

All concrete screws UCS-10x100 can be replaced by fischer UltraCut FBS II 10x100.

MoFi and bolt anchor – wall. cracked concrete

Wall area in m²	Wind zone 2 Gust velocity pressure q_p = 0.65 kN/m² Pressure coefficient $c_{p.net}$			
	2.3	2.3	3.4	3.4
	Prop angle α			
	45°	60°	45°	60°
4	2.38 kN → MoFi-12/MAX-12/10/110	3.36 kN → MoFi-12/MAX-12/10/110	3.52 kN → MoFi-12/MAX-12/10/110	4.97 kN → MoFi-12/MAX-12/10/110
6	3.57 kN → MoFi-12/MAX-12/10/110	5.05 kN → MoFi-12/MAX-12/10/110	5.27 kN → MoFi-12/MAX-12/10/110	7.46 kN → MoFi-12/MAX-12/10/110
8	4.76 kN → MoFi-12/MAX-12/10/110	6.73 kN → MoFi-12/MAX-12/10/110	7.03 kN → MoFi-12/MAX-12/10/110	9.94 kN → MoFi-16/MAX-16/25/148
10	5.95 kN → MoFi-12/MAX-12/10/110	8.41 kN → MoFi-12/MAX-12/10/110	8.79 kN → MoFi-12/MAX-12/10/110	12.43 kN → MoFi-16/MAX-16/25/148
12	7.14 kN → MoFi-12/MAX-12/10/110	10.09 kN → MoFi-16/MAX-16/25/148	10.55 kN → MoFi-16/MAX-16/25/148	14.92 kN → MoFi-16/MAX-16/25/148
14	8.32 kN → MoFi-12/MAX-12/10/110	11.77 kN → MoFi-16/MAX-16/25/148	12.31 kN → MoFi-16/MAX-16/25/148	
16	9.51 kN → MoFi-16/MAX-16/25/148	13.45 kN → MoFi-16/MAX-16/25/148	14.06 kN → MoFi-16/MAX-16/25/148	
18	10.70 kN → MoFi-16/MAX-16/25/148	15.14 kN → MoFi-16/MAX-16/25/148		
20	11.89 kN → MoFi-16/MAX-16/25/148			
22	13.08 kN → MoFi-16/MAX-16/25/148			
24	14.27 kN → MoFi-16/MAX-16/25/148			
26	15.46 kN → MoFi-16/MAX-16/25/148			
28				
30				
32				

Intermediate values for the respective wall surface may be interpolated linearly

Wall area in m²	Wind zone 3 Gust velocity pressure q_p = 0.80 kN/m² Pressure coefficient $c_{p.net}$			
	2.3	2.3	3.4	3.4
	Prop angle α			
	45°	60°	45°	60°
4	2.93 kN → MoFi-12/MAX-12/10/110	4.14 kN → MoFi-12/MAX-12/10/110	4.33 kN → MoFi-12/MAX-12/10/110	6.12 kN → MoFi-12/MAX-12/10/110
6	4.39 kN → MoFi-12/MAX-12/10/110	6.21 kN → MoFi-12/MAX-12/10/110	6.49 kN → MoFi-12/MAX-12/10/110	9.18 kN → MoFi-12/MAX-12/10/110
8	5.85 kN → MoFi-12/MAX-12/10/110	8.28 kN → MoFi-12/MAX-12/10/110	8.65 kN → MoFi-12/MAX-12/10/110	12.24 kN → MoFi-16/MAX-16/25/148
10	7.32 kN → MoFi-12/MAX-12/10/110	10.35 kN → MoFi-16/MAX-16/25/148	10.82 kN → MoFi-16/MAX-16/25/148	15.3 kN → MoFi-16/MAX-16/25/148
12	8.78 kN → MoFi-12/MAX-12/10/110	12.42 kN → MoFi-16/MAX-16/25/148	12.98 kN → MoFi-16/MAX-16/25/148	
14	10.25 kN → MoFi-16/MAX-16/25/148	14.49 kN → MoFi-16/MAX-16/25/148	15.15 kN → MoFi-16/MAX-16/25/148	
16	11.71 kN → MoFi-16/MAX-16/25/148			
18	13.17 kN → MoFi-16/MAX-16/25/148			
20	14.64 kN → MoFi-16/MAX-16/25/148			
22				
24				
26				
28				
30				
32				

Intermediate values for the respective wall surface may be interpolated linearly

Designation of bolt anchor:

diameter/thickness of attachments/length

Basics

▶ Wall element:

– Minimum shell thickness:	≥ 50 mm	
– Concrete compressive strength:	$f_{ck.cube} \geq 25$ N/mm²	
– Reinforcement of double-wall shell:	at least mat Q188 or equivalent	

▶ Stresses:

– Gust speed (h ≤ 10 m): (according to DIN 1991-1-4/NA:2010-12. Table NA.B.3)	$q_p = 0.65$ kN/m²	Wind zone 2 – inland
	$q_p = 0.80$ kN/m²	Wind zone 3 – inland
– Reduction for state of building: (according to DIN 1991-1-4/NA:2010-12. Table NA.B.5)	$red_{Wind} = 0.5$	Assembly period between May and August (max. 3 months) or alternatively up to 3 days all year round. no safety measures
– Partial safety factor:	$\gamma_w = 1.5$	

Notice:
No further stresses were taken into account for the dimensioning of the anchoring points for the push-pull props.

▶ Ground anchoring

– Crack condition. floor:	Cracked concrete
– Concrete compressive strength:	$f_{ck.cube} \geq 25$ N/mm²
– Maximum mounting part thickness for UCS-10x100:	$t_{fix} \leq 15$ mm
– Maximum mounting part thickness for UCS-14x125:	$t_{fix} \leq 10$ mm
– Maximum mounting thickness for MAX-12/10/110:	$t_{fix} \leq 10$ mm
– Maximum mounting thickness for MAX-16/25/148:	$t_{fix} \leq 25$ mm

▶ Push-pull prop:

– Static system:
(Push-pull prop head is always positioned at 1/3 x h)

– Number of push-pull props: **2 per** wall element

– Note: Eccentricities at the push-pull prop head and push-pull prop base (union joint) were not considered when creating the table.

Notice:
Base point B of the wall plate must be verified!

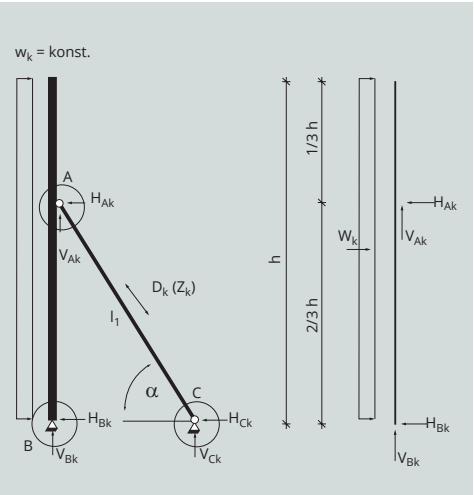

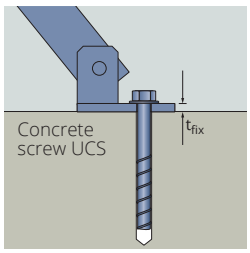

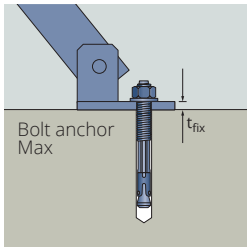

Fixing Bracket System

The PFEIFER Fixing Bracket System has been developed for the load-bearing corner connection of precast concrete elements. A defined interlocking of bracket and toothed washer allows loads to be transferred and geometrical tolerances to be absorbed in parallel.

Your advantages

- Flexibility supplied by practice-orientated tolerance ranges
- Secure, quick and simple connection of concrete elements by bolting together
- Reusable
- Practice-oriented carrying capacities

More information can be found at
www.pfeifer.info/lcon-winkel

Fixing Bracket System

Fixing Bracket

LCON Fixing Bracket 168

Technical information

Dimensioning tables – LCON 169
Selection aid – fixing bracket system 173

LCON Fixing Bracket

Use

- For simple corner connection of precast elements
- Permanent or temporary, load bearing connection
- Anchoring in the building component via separate anchoring points such as DB Anchor, bolt anchor or concrete screws
- LCON VS Fixing Bracket – isosceles version – ensures that the anchoring points are not in the rail area

Your advantages

- Practice-orientated tolerance fields
- Secure, quick and simple connection of concrete elements by bolting together
- Fits all anchor systems
- Reusable
- Easy and quick installation due to slotted holes

Component recommendation

✓ T-joints of precast elements of any kind

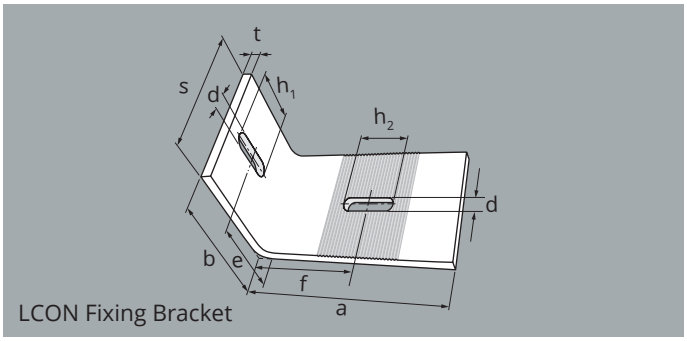

LCON Fixing Bracket

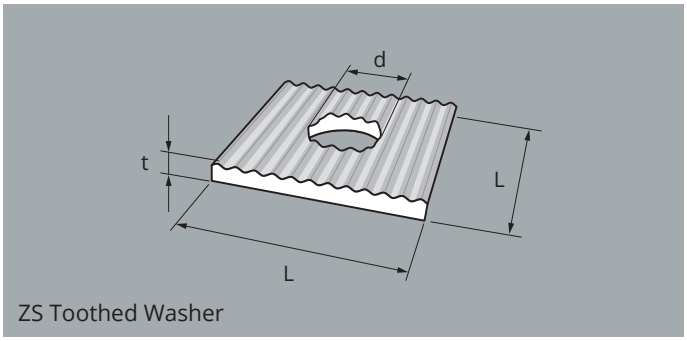

ZS Toothed Washer

LCON Fixing Bracket. set including ZS Toothed Washer – galvanized steel

Ref. no.	Type	Dimensions									Packing unit	Weight approx.	Price plus RTZ
		a [mm]	b [mm]	s [mm]	t [mm]	d [mm]	h_1 [mm]	h_2 [mm]	e [mm]	f [mm]	[pieces]	[kg/pcs]	[EUR/pcs]
320526	**LCON-T1 + ZS-1**	170	110	60	6	11	45	45	70.0	105	12	0.83	**on request**
374726	**LCON-T2 + ZS-2**	170	110	80	6	13	50	50	67.5	105	10	1.08	**on request**
324134	**LCON-T3 + ZS-3**	180	110	80	8	13	50	50	70.0	105	8	1.44	**on request**
374727	**LCON-T4 + ZS-4**	195	110	80	10	18	60	60	70.0	120	6	1.88	**on request**
374728	**LCON-VS + ZS-4**	200	200	80	12	18	60	60	135.0	135	5	2.93	**on request**

CE

Spare ZS Toothed Washer – galvanized steel

Ref. no.	Type	Dimensions			Packing unit	Weight approx.	Price plus RTZ
		L [mm]	d [mm]	t [mm]	[pieces]	[kg/100 pcs]	[EUR/pcs]
322471	**ZS-1**	40	11	6	50	7.60	**1.76**
324138	**ZS-2/3**	40	13	6	50	7.60	**1.81**
324140	**ZS-4**	45	18	6	50	9.60	**1.93**

CE

Dimensioning tables – LCON

The following tables can be used to quickly select the required LCON size and suitable anchorage.

Example of application

- Wall area: 6.00 m x 3.00 m (l x h) = 18 m² ④
- Wall thickness: 80 mm
- Concrete compressive strength wall: $f_{ck,cube}$ = 25 N/mm²
- Surface reinforcement: Q 188
- Wind zone 2 – inland – h ≤ 10 m, gust velocity pressure: q_p = 0.65 kN/m² (according to DIN 1991-1-4/NA:2010-12, Table NA.B.3)
- Pressure coefficient: $c_{p,net}$ = 2.3 (related to a straight wall, l/h ≥ 3, area A)
- State of construction, assembly period is between May and August (maximum 3 months) and assembly takes maximum 3 days, reduction: red_{wind} = 0.5 (DIN EN 1991-1-4/NA:2010-12, Table NA.B.5)

Procedure

LCON with concrete screw

	Wind zone 2 ②					
	Gust velocity pressure q_p = 0.65 kN/m²					
	Pressure coefficient $c_{p.net}$					
	2.3 ③			3.4		
Wall area in m²						
4	1.12	LCON-1	UCS-8 x 70	1.66	LCON-1	UCS-8 x 70
6	1.68	LCON-1	UCS-8 x 70	2.49	LCON-2	UCS-10 x 100
8	2.24	LCON-1	UCS-8 x 70	3.32	LCON-3	UCS-10 x 100
10	2.80	LCON-2	UCS-10 x 100	4.14	LCON-3	UCS-10 x 100
12	3.36	LCON-3	UCS-10 x 100	4.97	LCON-3	UCS-10 x 100
14	3.92	LCON-3	UCS-10 x 100	5.80	LCON-4	UCS-14 x 125
16	4.49	LCON-3	UCS-10 x 100	6.63	LCON-4	UCS-14 x 125
④ 18 →	5.05	LCON-3	UCS-10 x 100	7.46	LCON-4	UCS-14 x 125
20	5.61	LCON-4	UCS-14 x 125			
22	6.17	LCON-4	UCS-14 x 125			
24	6.73	LCON-4	UCS-14 x 125			
26	7.29	LCON-4	UCS-14 x 125			
28	7.25	LCON-4	UCS-14 x 125			
30						
32						

Selected:
- **4 x fixing bracket LCON-3**
- **8 x concrete screw UCS-10x100**

LCON with concrete screw

Wall area in m²	Wind zone 1 Gust velocity pressure q_p = 0.50 kN/m² Pressure coefficient $c_{p.net}$					
	2.3			3.4		
4	0.86	LCON-1	UCS-8 x 70	1.28	LCON-1	UCS-8 x 70
6	1.29	LCON-1	UCS-8 x 70	1.91	LCON-1	UCS-8 x 70
8	1.73	LCON-1	UCS-8 x 70	2.55	LCON-2	UCS-10 x 100
10	2.16	LCON-1	UCS-8 x 70	3.19	LCON-3	UCS-10 x 100
12	2.59	LCON-2	UCS-10 x 100	3.83	LCON-3	UCS-10 x 100
14	3.02	LCON-3	UCS-10 x 100	4.46	LCON-3	UCS-10 x 100
16	3.45	LCON-3	UCS-10 x 100	5.10	LCON-3	UCS-10 x 100
18	3.88	LCON-3	UCS-10 x 100	5.74	LCON-4	UCS-14 x 125
20	4.31	LCON-3	UCS-10 x 100	6.38	LCON-4	UCS-14 x 125
22	4.74	LCON-3	UCS-10 x 100	7.01	LCON-4	UCS-14 x 125
24	5.18	LCON-3	UCS-10 x 100	7.65	LCON-4	UCS-14 x 125
26	5.61	LCON-4	UCS-14 x 125			
28	6.04	LCON-4	UCS-14 x 125			
30	6.47	LCON-4	UCS-14 x 125			
32	6.90	LCON-4	UCS-14 x 125			

Wall area in m²	Wind zone 2 Gust velocity pressure q_p = 0.65 kN/m² Pressure coefficient $c_{p.net}$					
	2.3			3.4		
4	1.12	LCON-1	UCS-8 x 70	1.66	LCON-1	UCS-8 x 70
6	1.68	LCON-1	UCS-8 x 70	2.49	LCON-2	UCS-10 x 100
8	2.24	LCON-1	UCS-8 x 70	3.32	LCON-3	UCS-10 x 100
10	2.80	LCON-2	UCS-10 x 100	4.14	LCON-3	UCS-10 x 100
12	3.36	LCON-3	UCS-10 x 100	4.97	LCON-3	UCS-10 x 100
14	3.92	LCON-3	UCS-10 x 100	5.80	LCON-4	UCS-14 x 125
16	4.49	LCON-3	UCS-10 x 100	6.63	LCON-4	UCS-14 x 125
18	5.05	LCON-3	UCS-10 x 100	7.46	LCON-4	UCS-14 x 125
20	5.61	LCON-4	UCS-14 x 125			
22	6.17	LCON-4	UCS-14 x 125			
24	6.73	LCON-4	UCS-14 x 125			
26	7.29	LCON-4	UCS-14 x 125			
28	7.85	LCON-4	UCS-14 x 125			
30						
32						

Designation of concrete screw:

Screw diameter x screw length

Note:

All concrete screws UCS-10x100 can be replaced by fischer UltraCut FBS II 10x100.

LCON with bolt anchor

Wall area in m²	Wind zone 1 Gust velocity pressure q_p = 0.50 kN/m² Pressure coefficient $c_{p.net}$					
	2.3			3.4		
4	0.86	LCON-1	MAX-8/10/75	1.28	LCON-1	MAX-8/10/75
6	1.29	LCON-1	MAX-8/10/75	1.91	LCON-1	MAX-8/10/75
8	1.73	LCON-1	MAX-8/10/75	2.55	LCON-2	MAX-10/10/95
10	2.16	LCON-1	MAX-8/10/75	3.19	LCON-3	MAX-10/10/95
12	2.59	LCON-2	MAX-10/10/95	3.83	LCON-3	MAX-10/10/95
14	3.02	LCON-3	MAX-10/10/95	4.46	LCON-3	MAX-10/10/95
16	3.45	LCON-3	MAX-10/10/95	5.10	LCON-4	MAX-16/25/148
18	3.88	LCON-3	MAX-10/10/95	5.74	LCON-4	MAX-16/25/148
20	4.31	LCON-3	MAX-10/10/95	6.38	LCON-4	MAX-16/25/148
22	4.74	LCON-4	MAX-16/25/148	7.01	LCON-4	MAX-16/25/148
24	5.18	LCON-4	MAX-16/25/148	7.65	LCON-4	MAX-16/25/148
26	5.61	LCON-4	MAX-16/25/148			
28	6.04	LCON-4	MAX-16/25/148			
30	6.47	LCON-4	MAX-16/25/148			
32	6.90	LCON-4	MAX-16/25/148			

Wall area in m²	Wind zone 2 Gust velocity pressure q_p = 0.65 kN/m² Pressure coefficient $c_{p.net}$					
	2.3			3.4		
4	1.12	LCON-1	MAX-8/10/75	1.66	LCON-1	MAX-8/10/75
6	1.68	LCON-1	MAX-8/10/75	2.49	LCON-2	MAX-10/10/95
8	2.24	LCON-1	MAX-8/10/75	3.32	LCON-3	MAX-10/10/95
10	2.80	LCON-2	MAX-10/10/95	4.14	LCON-3	MAX-10/10/95
12	3.36	LCON-3	MAX-10/10/95	4.97	LCON-4	MAX-16/25/148
14	3.92	LCON-3	MAX-10/10/95	5.80	LCON-4	MAX-16/25/148
16	4.49	LCON-3	MAX-10/10/95	6.63	LCON-4	MAX-16/25/148
18	5.05	LCON-4	MAX-16/25/148	7.46	LCON-4	MAX-16/25/148
20	5.61	LCON-4	MAX-16/25/148			
22	6.17	LCON-4	MAX-16/25/148			
24	6.73	LCON-4	MAX-16/25/148			
26	7.29	LCON-4	MAX-16/25/148			
28	7.85	LCON-4	MAX-16/25/148			
30						
32						

Designation of bolt anchor:

diameter/thickness of attachments/length

Basics

▶ **Wall element:**

- Minimum shell thickness[1)]: LCON 1, 2 and 3 ≥ 80 mm | LCON 4 ≥ 140 mm
- Concrete compressive strength: $f_{ck,cube}$ ≥ 25 N/mm²
- Surface reinforcement: at least mat Q188 or equivalent

Notice:

[1)] Indication of the minimum wall thickness in relation to the selected concrete screw/bolt anchor.
For further details, refer to the respective approval: ETA-18/0762 (UCS Concrete Screw) and ETA-10/0170 (MAX Bolt Anchor).

▶ **Stresses:**

- Gust speed (h ≤ 10 m): (according to DIN 1991-1-4/NA:2010-12, Table NA.B.3)
  - q_p = 0.50 kN/m² — Wind zone 1 – inland
  - q_p = 0.65 kN/m² — Wind zone 2 – inland
- Reduction for state of building: (according to DIN 1991-1-4/NA:2010-12, Table NA.B.5) red_{Wind} = 0.5 — Assembly period between May and August (max. 3 months) or alternatively up to 3 days all year round, no safety measures
- Partial safety factor: γ_w = 1.5

Notice:

No other effects were considered for the design of the anchorage points.

▶ **Fixing Bracket System:**

- Number of brackets: **4 per** wall element (arrangement on both sides)
- Number of anchoring components: **2 per** bracket (ergo 8 pieces for 4 brackets)
- Anchoring components: UCS Concrete Screws or MAX Bolt Anchors, dimensioning of DB Base Anchors possible using free dimensioning software (see page 125)

Selection aid – fixing bracket system

Suitable fasteners

Bracket type	Fastening type	Diameter Slot [mm]
LCON-1	UCS 8x70 US TX concrete screw MAX express anchor 8/10/75	11
LCON-2	UCS 10x100 US concrete screw UltraCut FBS II 10x100 concrete screw MAX express anchor 10/10/95 DB base anchor Rd/M 12	13
LCON-3	UCS 10x100 US concrete screw UltraCut FBS II 10x100 concrete screw MAX express anchor 10/10/95 DB base anchor Rd/M 12	13
LCON-4	UCS 14x125 US concrete screw MAX express anchor 16/25/148 DB base anchor Rd/M 16	18
LCON-VS	UCS 14x125 US concrete screw MAX express anchor 16/25/148 DB base anchor Rd/M 16	18

Info: The selection is made by the responsible planner. Dimensioning is necessary for every application!
Table only takes into account the theoretical suitability.

Lift Mounting Anchor

The attachment points for lift construction are used for temporary loading by attached lift cars or other objects during installation and maintenance work. In lift construction. the safety of the fitters is vital and so the quality of the load attachments is of particular significance. Load eyes are also suitable for hanging the personal protective equipment of the fitters.

Your advantages

- Solutions for the attachment of material loads and personal protective equipment
- Approvals and TÜV tests available
- Correct attachment points for concreting in or for subsequent assembly

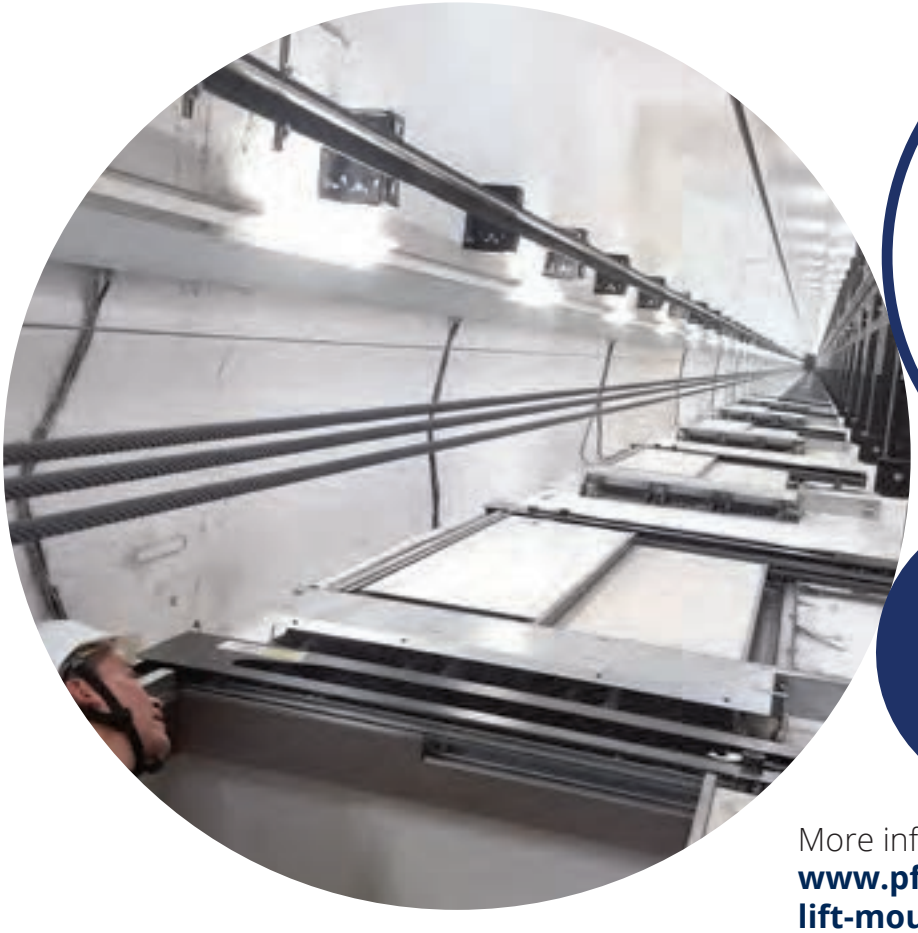

More information can be found at
www.pfeifer.info/
lift-mounting-anchor

Lift Mounting Anchor

Anchor

Load Eye 176
LSF Lifting Loop 177
LSV Lifting Loop 178
LSG Lifting Loop 179
LSP Lifting Loop 180

Technical information

Selection aid – Lift Mounting Anchor 181

Load Eye

Use

- Attachment point for temporary suspension of material loads during installation and maintenance work in lift shafts
- Or as an attachment point for personal protective equipment
- Top-sided installation in reinforced concrete slabs

Your advantages

- Low slab thickness necessary
- Attachment point for material loads or for personal protection in one product
- General Building Authority Approvals (abZ) for both applications

Component recommendation

☑ Slab in lift shaft

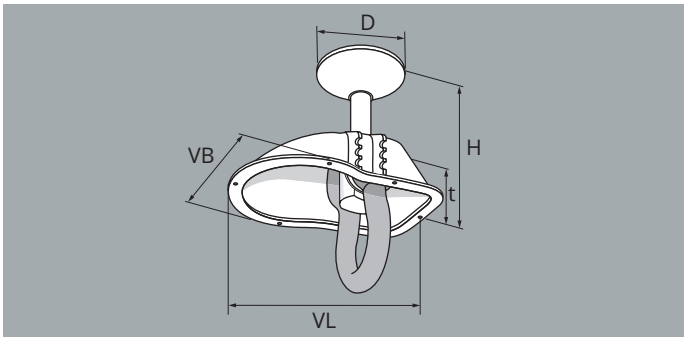

Load Eye – plastic/galvanized steel

Ref. no.	Type	Working load limit WLL	Dimensions					Load carrier	Packing unit	Weight approx.	Price plus RTZ
		[kN]	D [mm]	H [mm]	VL [mm]	VB [mm]	t [mm]	[pieces]	[pieces]	[kg/pcs]	[EUR/pcs]
505695	LOE-20	20	90	130	195	132	60	90	1	2.30	**93.30**
505697	LOE-40	40	90	200	195	132	60	45	1	2.48	**103.00**

LSF Lifting Loop

Use

- Attachment point for temporary suspension of material loads during installation and maintenance work in lift shafts
- Top-sided installation in reinforced concrete slabs

Your advantages

- Loop cannot unscrew and er load
- Type examination with TÜV certificate

Component recommendation

✓ Slab in lift shaft

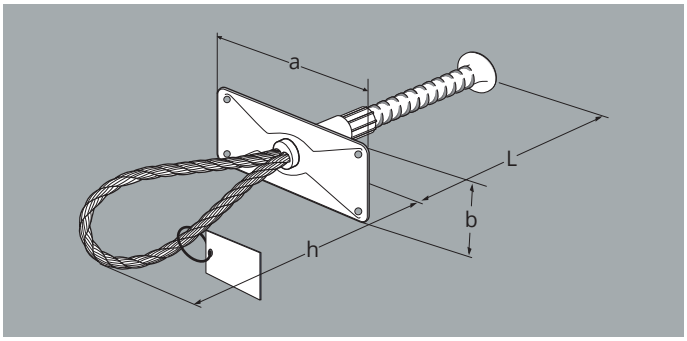

LSF Lifting Loop – galvanized steel

Ref. no.	Type	Working load limit WLL	Dimensions				Load carrier	Packing unit	Weight approx.	Price plus RTZ
		[kN]	L [mm]	h [mm]	a [mm]	b [mm]	[pieces]	[pieces]	[kg/pcs]	[EUR/pcs]
250721	**LSF-12.5**	12.5	148	180	170	70	60	60	0.71	**45.30**
250722	**LSF-22.5**	22.5	218	245	170	70	40	40	1.86	**56.80**

LSV Lifting Loop

Use

- Attachment point for statically stationary loads during installation and maintenance work in lift shafts
- Top-sided installation in reinforced concrete slabs

Your advantages

- Time saving due to the fastening to the formwork
- Type examination with TÜV certificate

Component recommendation

☑ Slab in lift shaft

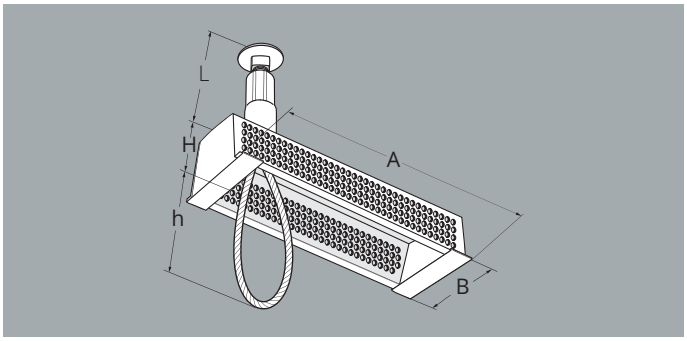

LSV Lifting Loop – galvanized steel

Ref. no.	Type	Working load limit WLL	Dimensions					Packing unit	Weight approx.	Price plus RTZ
		[kN]	L [mm]	h [mm]	H [mm]	A [mm]	B [mm]	[pieces]	[kg/pcs]	[EUR/pcs]
250922	**LSV-10.0**	10.0	85	90	50	230	80	1	0.48	**48.10**
250923	**LSV-17.5**	17.5	110	145	50	230	80	1	0.88	**57.30**

LSG Lifting Loop

Use

- Attachment point for temporary suspension of material loads during installation and maintenance work in lift shafts
- Subsequent installation in slab and er-surfaces through a hole in the slab. locked with a plate

Your advantages

- Flexible subsequent installation
- Loop cannot unscrew and er load
- Type examination with TÜV certificate

Component recommendation

✓ Slab in lift shaft

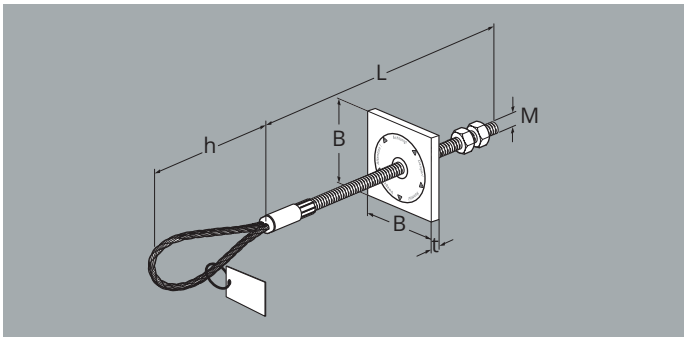

LSG Lifting Loop – galvanized steel

Ref. no.	Type	Working load limit WLL	Thread size	Dimensions				Load carrier	Packing unit	Weight approx.	Price plus RTZ
				L	h	B	t				
		[kN]		[mm]	[mm]	[mm]	[mm]	[pieces]	[pieces]	[kg/pcs]	[EUR/pcs]
248364	**LSG-10.0**	10.0	M 12	530	130	120	12	30	30	1.90	**96.80**
248938	**LSG-17.5**	17.5	M 16	540	180	120	12	30	30	2.50	**102.50**
248939	**LSG-25.0**	25.0	M 20	550	215	160	12	60	15	4.08	**113.50**
248940	**LSG-40.0**	40.0	M 20	555	245	200	15	20	10	7.08	**149.50**

LSP Lifting Loop

Use

- Attachment point for temporary suspension of material loads during installation and maintenance work in lift shafts
- Subsequent installation in slab and er-surfaces by screwing on the plate

Your advantages

- Flexible subsequent installation
- Loop cannot unscrew and er load
- Type examination with TÜV certificate

Component recommendation

✓ Slab in lift shaft

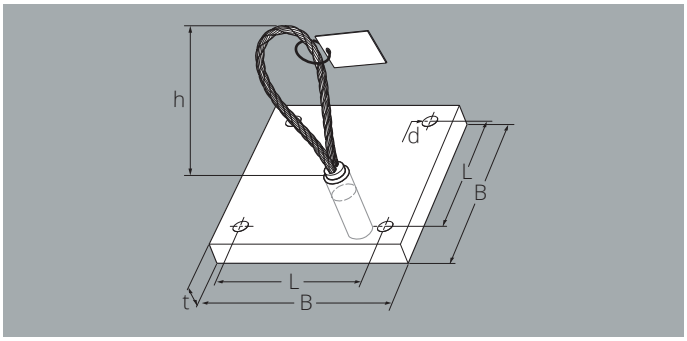

LSP Lifting Loop – galvanized steel

Ref. no.	Type	Working load limit WLL	Dimensions					Load carrier	Packing unit	Weight approx.	Price plus RTZ
		[kN]	h [mm]	t [mm]	B [mm]	L [mm]	d [mm]	[pieces]	[pieces]	[kg/pcs]	[EUR/pcs]
248928	**LSP-10.0**	10.0	130	15	150	120	9	40	40	2.75	**109.50**
248951	**LSP-17.5**	17.5	180	18	200	150	12	25	25	5.85	**118.50**
248953	**LSP-25.0**	25.0	215	20	250	190	14	15	15	10.40	**155.50**
248954	**LSP-40.0**	40.0	245	25	320	260	14	8	8	20.60	**224.50**

Selection aid – Lift Mounting Anchor

		Lift Mounting Anchor				
		Load Eye	LSF Lifting Loop	LSV Lifting Loop	LSP Lifting Loop	LSG Lifting Loop
Installation time	Direct installation (before concreting)	✓	✓	✓		
	subsequent installation (after concreting)				✓	✓
Type of permit	TÜV test		✓	✓	✓	✓
	Building authority approval	✓				
For personal protective equipment		✓				

Personal protection system

The attachment point for personal protective equipment is suitable for use on concrete components during assembly, installation and service work. This fastening therefore meets the highest safety requirements. The system consists of a DB Attachment Point, PSA Eye Bolt and additional installation accessories.

Your advantages

- Flexibility through different installation variants and load directions
- Economical because anchor embedded in concrete separated from reusable PSA Eye Bolt
- Powerful enough for up to two persons per attachment point
- TÜV SÜD approved system consisting of DB Attachment Point and PSA Eye Bolt according to EN 795 & CEN/TS 16415

More information can be found at
www.pfeifer.info/db-attachment-point

Personal protection system

Anchor

DB Attachment Point PSA 184
PSA Eye Bolt 185

Accesories

PSA Fixing Bolt/Cover Cap 186
PSA Recess Disc. 187

Here you can find further products for personal protective equipment:
www.pfeifer.info/ fall-protection

DB Attachment Point PSA

Use

- Efficient anchoring of loads resulting from falls of secured workers
- Up to two items of personal protective equipment can be attached to each point

Your advantages

- Different load directions possible
- Permitted for up to two persons per attachment point
- TÜV SÜD approved system consisting of DB Attachment Point and PSA Eye Bolt according to EN 795 & CEN/TS 16415
- European Technical Assessment (ETA) for anchoring

Component recommendation

☑ Slab/panel ☑ TT slabs

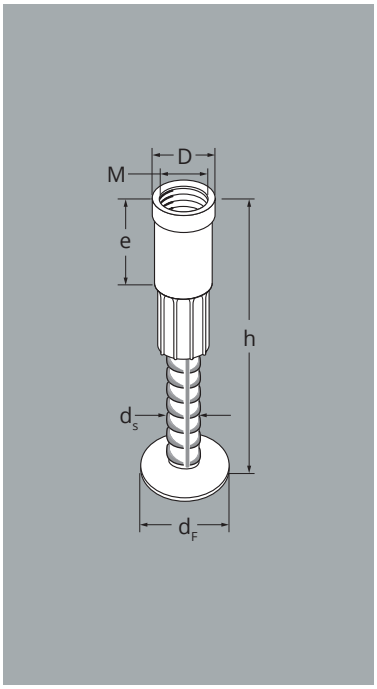

DB Attachment Point PSA – galvanized steel socket

Ref. no.	Type	Thread size	Dimensions					Packing unit	Weight approx.	Price plus RTZ
			h [mm]	d_F [mm]	d_s [mm]	e [mm]	D [mm]	[pieces]	[kg/100 pcs]	[EUR/pcs]
364375	**PSA-ZN-16**	M 16	120.0	36	12	27	21.0	50	20.00	**4.80**

DB Attachment Point PSA – stainless steel socket

Ref. no.	Type	Thread size	Dimensions					Packing unit	Weight approx.	Price plus RTZ
			h [mm]	d_F [mm]	d_s [mm]	e [mm]	D [mm]	[pieces]	[kg/100 pcs]	[EUR/pcs]
364377	**PSA-VA-16**	M 16	120.0	36	12	27	21.0	50	20.00	**17.15**

PSA Eye Bolt

Use

- Robust attachment point for personal protective equipment
- Simply screw the eye bolt into the DB Attachment Point, hook the protective equipment into the eye

Your advantages

- Different load directions possible
- Permitted for up to two persons per attachment point
- Reusable
- Integrated hexagon key for tightening and loosening, firmly connected
- TÜV SÜD approved system consisting of DB Attachment Point and PSA Eye Bolt according to EN 795 & CEN/TS 16415

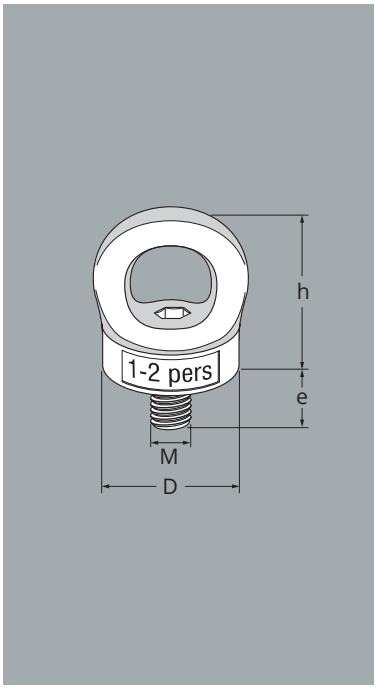

PSA Eye Bolt – galvanized steel

Ref. no.	Type	Thread size	Dimensions			Packing unit	Weight approx.	Price plus RTZ
			h [mm]	e [mm]	D [mm]	[pieces]	[kg/100 pcs]	[EUR/pcs]
368463	**RS-VA-16**	M 16	72.5	24	56.0	1	72.00	**63.10**

PSA Fixing Bolt/Cover Cap

Use

- The product is used as a fixing bolt to connect the PSA Recess Disc with the DB Attachment Point – the recess disc can in turn be fixed to the formwork. The anchors are thus recessed
- The fixing bolt and the recess disc can easily be plugged in together
- The product can be used as a permanent, corrosion-resistant closure of the internal thread in the anchor after the attachment point has been used.

Your advantages

- Formwork fixing and closure in one product
- Reusable
- Protected against corrosion

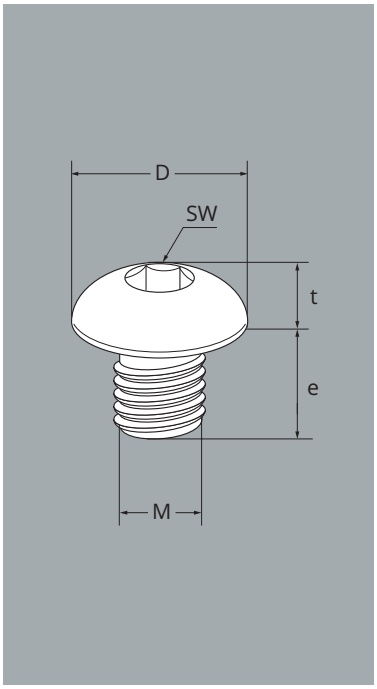

PSA Fixing Bolt/Cover Cap – stainless steel

Ref. no.	Type	Thread size	Dimensions				Packing unit	Weight approx.	Price plus RTZ
			SW [mm]	e [mm]	D [mm]	t [mm]	[pieces]	[kg/100 pcs]	[EUR/pcs]
364909	**BS-VA-PSA**	M 16	8	13	30.0	8.5	20	6.00	**20.70**

PSA Recess Disc

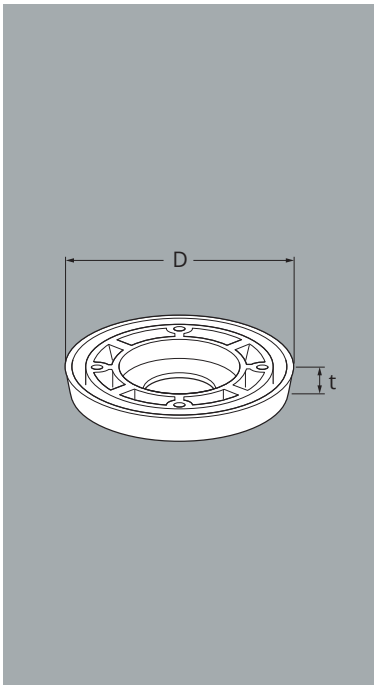

Use

- Combined with the PSA Fixing Bolt/Cover Cap, the PSA Recess Disc is used to install a DB Attachment Point in a precast element with a diameter that is recessed and enlarged
- An enlarged recess diameter is required to ensure the necessary contact surface for the eye bolt with a recessed anchor – system components matched to each other
- The fixing bolt and the recess disc can easily be plugged in together

Your advantages

- Generation of a recess matched to the eye bolt for the recessed installation of DB Attachment Points
- Flexible installation – nailing, screwing or gluing
- Can be used for visually attractive closure of the recess

Aussparungsteller PSA – Kunststoff

Ref. no.	Type	Dimensions		Packing unit	Weight approx.	Price plus RTZ
		D [mm]	t [mm]	[pieces]	[kg/100 pcs]	[EUR/pcs]
364852	**AT-K-PSA**	62.5	10.0	50	1.25	**2.21**

Connect

Rope loop Connection p. 190

Various cable loop products are available for connecting concrete elements – boxes – as well as rail systems. In the case of statically load-bearing connections, only approved rope loop systems may be used. The constructive VS® systems are used for statically non-load-bearing connections. Connection details that are not relevant to the stability of the building and from which there is no danger to life and limb even if the system fails are meant as statically non-load-bearing connections.

Screw connection p. 204

The system for screw connections includes various products for the non-positive connection of finished parts. Column bases are used in combination with foundation anchors for the rigid connection of precast concrete columns to one another, to foundations or as a connection for beams. Wall shoes can also be used in combination with foundation anchors to connect two prefabricated walls on the underside or to connect the wall to the foundation. The screw connection system saves a lot of time compared to conventional systems.

Wire rope loop connections

Various wire rope loops are available for Connect concrete elements – boxes – as well as rail systems.
Only approved wire rope loop systems may be used for statically supporting connections. The constructive VS® Systems are used for static non-load-bearing connections. Non-static connections are connection details that are not relevant to the stability of the building and which pose no danger to life and limb even if the system fails.

Your advantages

- High performance application-orientated load capacities
- Optimum profile for optimum connection
- Low mortar consumption
- Free dimensioning software

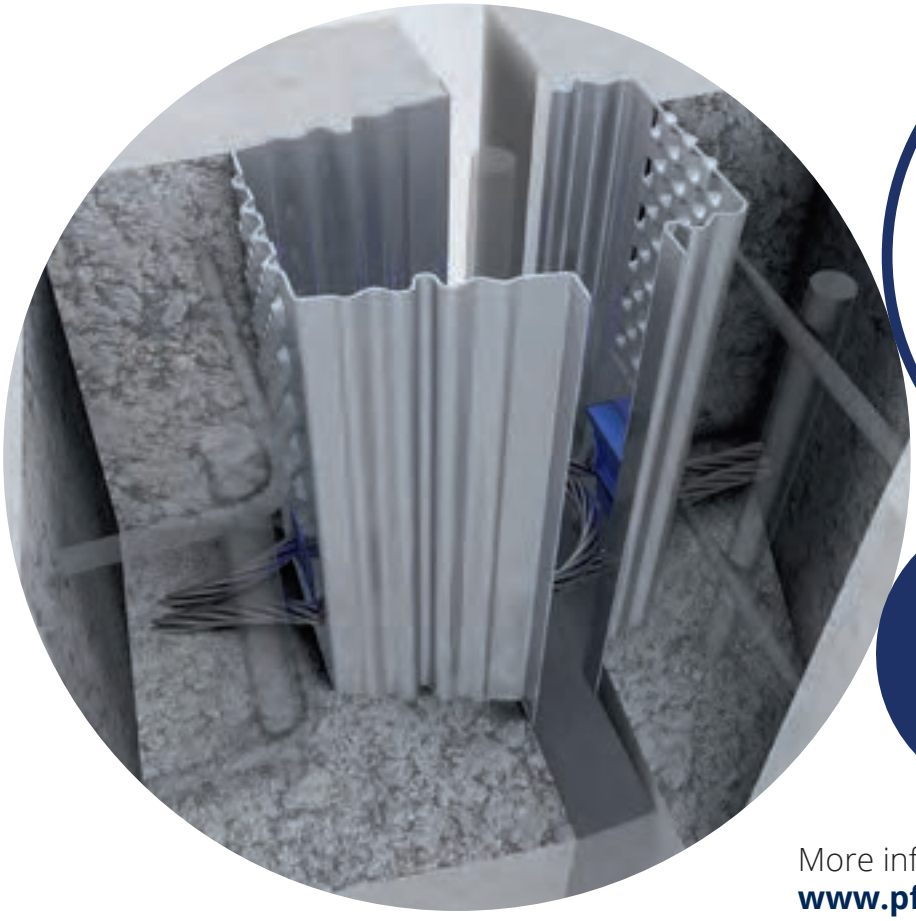

More information can be found at
www.pfeifer.info/
wire-rope-loop-connections

Mortar

For information:

VS®-PAGEL®-GROUT
VS®-P PAGEL®-JOINT FILLING MORTAR

Contact:
PAGEL SPEZIAL-BETON GmbH & Co. KG
Wolfsbankring 9, D-45355 Essen
Germany Phone: +49/(0)2 01/6 85 04-0
Email: info@pagel.com
Fax.: +49/(0)2 01/6 85 04-31
www.pagel.com

For information:

EuroGrout® Varix
EuroGrout® Universal Filler

Contact:
P & T Technische Mörtel GmbH & Co. KG
Bataverstraße 84, D-41462 Neuss
Germany Phone: +49/(0)21 31/56 69-0
Email: info@eurogrout.de
Fax.: +49/(0)21 31/56 69-22
www.eurogrout.de

For information:

BETEC®-Grouting
BETEC®-Thixo

Contact:
GCP Germany GmbH
Alte Bottroper Str. 64, D-45356 Essen
Germany Phone: +49/(0)2 01/86 147-0
Email: info-de@gcpat.com
Fax.: +49/(0)2 01/61 94 75
www.gcpat.com

Wire rope loop connections

Rails and Ledges

VS® ISI Bar/Rail approved 192
VS® BZ Rail approved 193
VS® T Bar/Rail constructive 194
VS® W Rail constructive 195

Boxen

VS® Slim Box EASYFILL approved 196
VS® Box EASYFILL constructive 197
VS® Box CLASSIC constructive 198
FS Box LIGHT approved 199

Accesories

VS®-accesories 200

Technical information

Component recommendations –
Wire rope loop connections 201
Combination options –
Wire rope loop connections 201
VS®-ISI-System^{3D} fire prevention 202
To the free dimensioning software: 203

Dimensioning software now
download free of charge at:
www.pfeifer.info/software-suite-cls

VS® ISI Bar/Rail approved

Use

- Wire rope loop profiles for the load bearing connection of precast elements
- The ISI Bars (20 mm deep) and ISI Rails (50 mm deep) are always used in combination. They are connected by threading a reinforcement bar though their overlapping loops. The joint is then cast in place with a suitable mortar

Your advantages

- One design resistance for all mortars
- Joint filling with grouting or plastic/thixotropic mortar possible
- Can be installed in any direction
- Safety guaranteed by maximum tolerances with any loop position
- Low mortar consumption
- Colour-coded seal slider for easy assignment
- Free dimensioning software
- General Building Authority Approval (abZ)
- Extensive approval also covers the case of fire

Component recommendation

✓ Precast wall (load bearing) ✓ Precast wall (non-load bearing/structural) ✓ Column

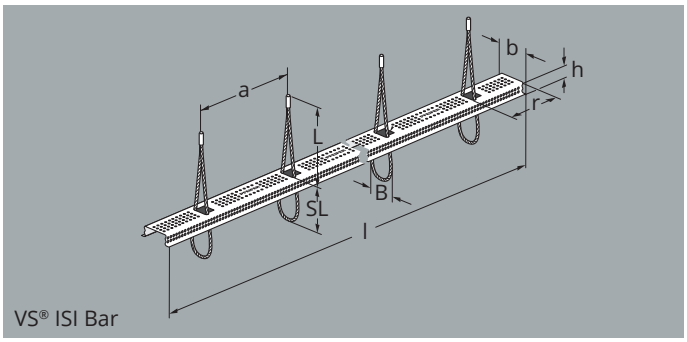

VS® ISI Bar

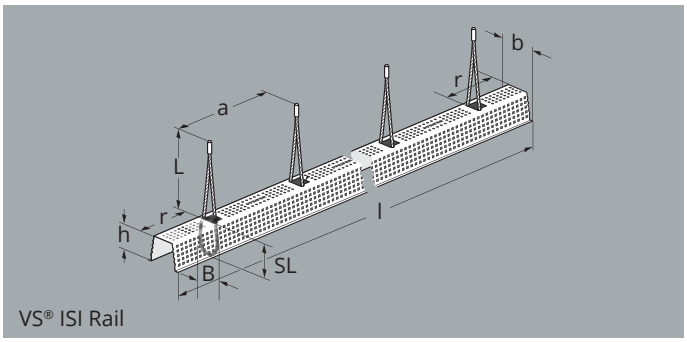

VS® ISI Rail

VS® ISI Bar – galvanized steel

Ref. no.	Type[1)]	Colour clip	Dimensions								Number of loops	Load carrier	Packing unit	Weight approx.	Preis zzgl. RT Z
			l [mm]	b [mm]	h [mm]	SL [mm]	L [mm]	a [mm]	r [mm]	B [mm]	n [pieces]	[pieces]	[pieces]	[kg/100 pcs]	[EUR/pcs]
245321	VS®-ISI-20	blue	1180	70	20	80	227	236	118	60	5	100	100	132.00	**59.80**
287840	VS®-T-20/0	–	1180	70	20	–	–	–	–	–	0	100	100	64.00	**24.00**

VS® ISI Rail – galvanized steel

Ref. no.	Type[1)]	Colour clip	Dimensions								Number of loops	Load carrier	Packing unit	Weight approx.	Price plus RTZ
			l [mm]	b [mm]	h [mm]	SL [mm]	L [mm]	a [mm]	r [mm]	B [mm]	n [pieces]	[pieces]	[pieces]	[kg/100 pcs]	[EUR/pcs]
245477	VS®-ISI-50	blue	1180	80	50	80	227	236	118	60	5	60	60	166.00	**59.80**
287786	VS®-T-50/0	–	1180	80	50	–	–	–	–	–	0	60	60	116.00	**24.00**

[1)] No image shown for VS®-T-20/0 and VS®-T-50/0

VS® BZ Rail approved

Use

- Wire rope loop profiles for the load bearing connection of precast elements
- BZ Rails (50 mm deep) are always used in pairs. They are connected by threading a reinforcement bar though their overlapping loops. The joint is then cast in place with a suitable mortar

Your advantages

- Joint filling with grouting or plastic/thixotropic mortar possible
- Can be installed in any direction
- No danger of confusion during prefabrication or assembly
- Low mortar consumption
- Colour-coded seal slider for easy assignment
- Free dimensioning software
- General Building Authority Approval (abZ)

Component recommendation

☑ Precast wall (load bearing) ☑ Precast wall (non-load bearing/structural)

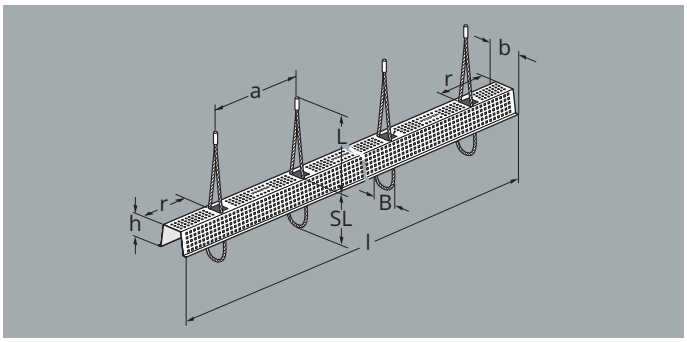

VS® BZ Rail – galvanized steel

Ref. no.	Type[1)]	Colour clip	Dimensions								Number of loops	Load carrier	Packing unit	Weight approx.	Price plus RTZ
			l [mm]	b [mm]	h [mm]	SL [mm]	L [mm]	a [mm]	r [mm]	B [mm]	n [pieces]	[pieces]	[pieces]	[kg/100 pcs]	[EUR/pcs]
257164	**VS®-BZ-50**	orange	1180	80	50	100	212	236	118	60	5	60	60	166.00	**59.80**
287786	**VS®-T-50/0**	–	1180	80	50	–	–	–	–	–	0	60	60	116.00	**24.00**

[1)] No image shown for VS®-T-50/0

VS® T Bar/Rail constructive

Use

- Wire rope loop profiles for the load bearing connection of precast elements
- The T Bars (20 mm deep) and T Rails (50 mm deep) are always used in combination. They are connected by threading a reinforcement bar though their overlapping loops. The joint is then cast in place with a suitable mortar

Your advantages

- Can be installed in any direction
- Any loop position
- Optimum profile for optimum connection
- Low mortar consumption
- Colour-coded seal slider for easy assignment

Component recommendation

☑ Precast wall (non-load bearing/structural) ☑ Column

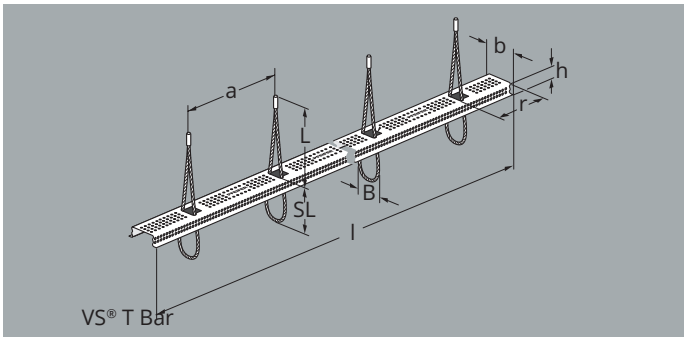

VS® T Bar

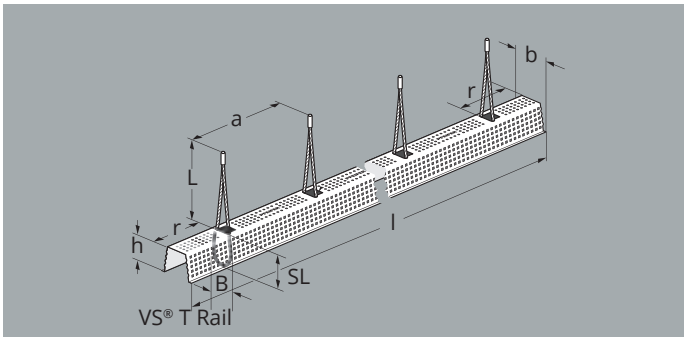

VS® T Rail

VS® T Bar – galvanized steel

Ref. no.	Type[1]	Colour clip	Dimensions								Number of loops	Load carrier	Packing unit	Weight approx.	Price plus RTZ
			l [mm]	b [mm]	h [mm]	SL [mm]	L [mm]	a [mm]	r [mm]	B [mm]	n [pieces]	[pieces]	[pieces]	[kg/100 pcs]	[EUR/pcs]
286802	VS®-T-20/2	black	1180	70	20	75	205	590	295	60	2	100	100	86.00	**37.00**
286803	VS®-T-20/4	black	1180	70	20	75	205	295	148	60	4	100	100	107.00	**39.70**
286804	VS®-T-20/6	black	1180	70	20	75	205	186	125	60	6	100	100	129.00	**41.70**
286805	VS®-T-20/7	black	1180	70	20	75	205	155	125	60	7	100	100	140.00	**43.90**
287840	VS®-T-20/0	–	1180	70	20	–	–	–	–	–	0	100	100	64.00	**24.00**

VS® T Rail – galvanized steel

Ref. no.	Type[1]	Colour clip	Dimensions								Number of loops	Load carrier	Packing unit	Weight approx.	Price plus RTZ
			l [mm]	b [mm]	h [mm]	SL [mm]	L [mm]	a [mm]	r [mm]	B [mm]	n [pieces]	[pieces]	[pieces]	[kg/100 pcs]	[EUR/pcs]
286798	VS®-T-50/2	black	1180	80	50	75	205	590	295	60	2	60	60	138.00	**37.00**
286799	VS®-T-50/4	black	1180	80	50	75	205	295	148	60	4	60	60	159.00	**39.70**
286800	VS®-T-50/6	black	1180	80	50	75	205	186	125	60	6	60	60	181.00	**41.70**
286801	VS®-T-50/7	black	1180	80	50	75	205	155	125	60	7	60	60	192.00	**43.90**
287786	VS®-T-50/0	–	1180	80	50	–	–	–	–	–	0	60	60	116.00	**24.00**

[1] No image shown for VS®-T-20/0 and VS®-T-50/0

VS® W Rail constructive

Use

- Wire rope loop profiles for the load bearing connection of precast elements
- W Rails (50 mm deep) are always used in pairs. They are connected by threading a reinforcement bar though their overlapping loops. The joint is then cast in place with a suitable mortar

Your advantages

- Can be installed in any direction
- No danger of confusion during prefabrication or assembly
- Optimum profile for optimum connection
- Low mortar consumption
- Colour-coded seal slider for easy assignment

Component recommendation

✓ Precast wall (non-load bearing/structural)

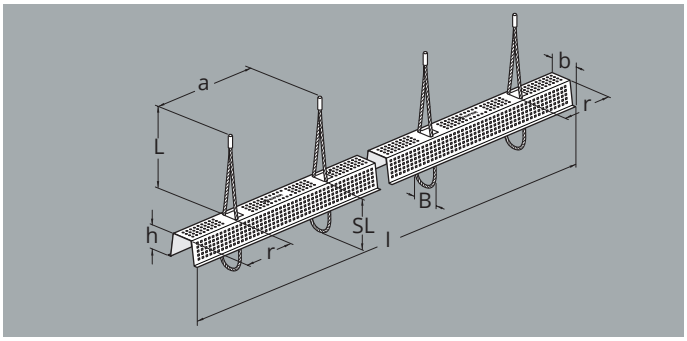

VS® W Rail – galvanized steel

Ref. no.	Type[1]	Colour clip	Dimensions								Number of loops	Load carrier	Packing unit	Weight approx.	Price plus RTZ
			l [mm]	b [mm]	h [mm]	SL [mm]	L [mm]	a [mm]	r [mm]	B [mm]	n [pieces]	[pieces]	[pieces]	[kg/100 pcs]	[EUR/pcs]
286806	**VS®-W-50/2**	white	1180	80	50	100	180	590	295	60	2	60	60	138.00	**37.00**
286807	**VS®-W-50/4**	white	1180	80	50	100	180	295	148	60	4	60	60	159.00	**39.70**
286808	**VS®-W-50/6**	white	1180	80	50	100	180	186	125	60	6	60	60	181.00	**41.70**
286809	**VS®-W-50/7**	white	1180	80	50	100	180	155	125	60	7	60	60	192.00	**43.90**
287786	**VS®-W-50/0**	–	1180	80	50	–	–	–	–	–	0	60	60	116.00	**24.00**

[1] No image shown for VS-T-50/0

VS® Slim Box EASYFILL approved

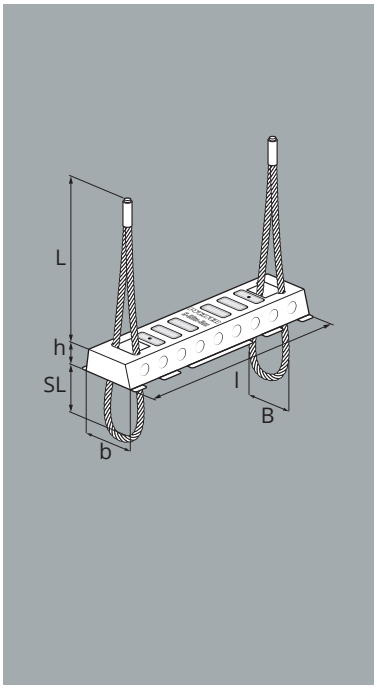

Use

- Wire rope loop boxes for the load bearing connection of precast elements
- The VS® Slim Box EASYFILL are used in pairs and installed opposite each other. They are connected by threading a reinforcement bar though their overlapping loops. The joint is then cast in place with a suitable mortar

Your advantages

- Flexibility guaranteed by case-specific box positioning
- Joint filling with grouting or plastic/thixotropic mortar possible
- Low mortar consumption
- Colour-coded seal slider for easy assignment
- Free dimensioning software
- General Building Authority Approval (abZ)

Component recommendation

✓ Precast wall (load-bearing)[1)]

✓ Precast wall (non-load bearing/structural)

✓ Column

VS® Slim Box EASYFILL – galvanized steel

Ref. no.	Type	Colour clip	Dimensions						Number of loops	Load carrier	Packing unit	Weight approx.	Price plus RTZ
			l [mm]	b [mm]	h [mm]	L [mm]	SL [mm]	B [mm]	n [pieces]	[pieces]	[pieces]	[kg/100 pcs]	[EUR/pcs]
370359	**VS®-SB-60**	yellow	200	50	20	205	60	55	2	400	400	35.50	**9.95**
309578	**VS®-SB-80**	blue	200	50	20	205	80	55	2	400	400	35.50	**9.95**

[1)] Ü mark on the basis of general building authority approval refers only to VS®-SB-80. Suitability for approval-related components only for this size.

VS® Box EASYFILL constructive

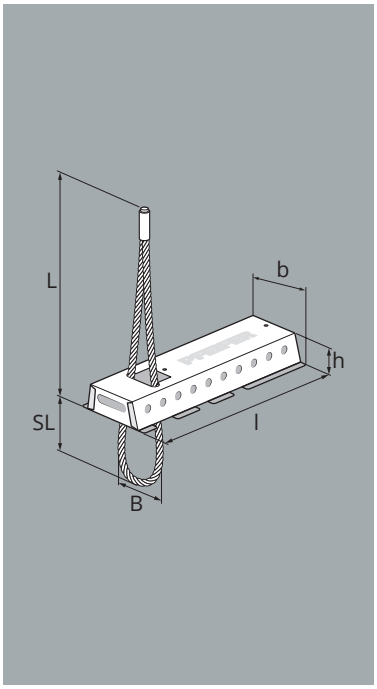

Use

- Wire rope loop boxes for the load bearing connection of precast elements
- The VS® Box EASYFILL are used in pairs and installed opposite each other
- They are connected by threading a reinforcement bar though their overlapping loops. The joint is then cast in place with a suitable mortar

Your advantages

- Flexibility guaranteed by case-specific box positioning
- Joint filling with grouting or plastic/thixotropic mortar possible
- Optimum profile for optimum connection
- Low mortar consumption
- Colour-coded seal slider for easy assignment

Component recommendation

✓ Precast wall (non-load bearing/structural)

✓ Column

VS® Box EASYFILL – galvanized steel

Ref. no.	Type	Colour clip	Dimensions						Number of loops	Load carrier	Packing unit	Weight approx.	Price plus RTZ
			l [mm]	h [mm]	L [mm]	SL [mm]	B [mm]	b [mm]	n [pieces]	[pieces]	[pieces]	[kg/100 pcs]	[EUR/pcs]
423914	**VS®-B-E-60**	yellow	160	20	212	60	50	60	1	800	800	20.00	**5.20**
325523	**VS®-B-E-80**	black	160	20	212	80	55	60	1	800	800	20.60	**5.20**
325524	**VS®-B-E-100**	white	160	20	212	100	62	60	1	800	800	20.80	**5.20**
325525	**VS®-B-E-120**	window grey	160	20	212	114	70	60	1	800	800	20.90	**5.20**

VS® Box CLASSIC constructive

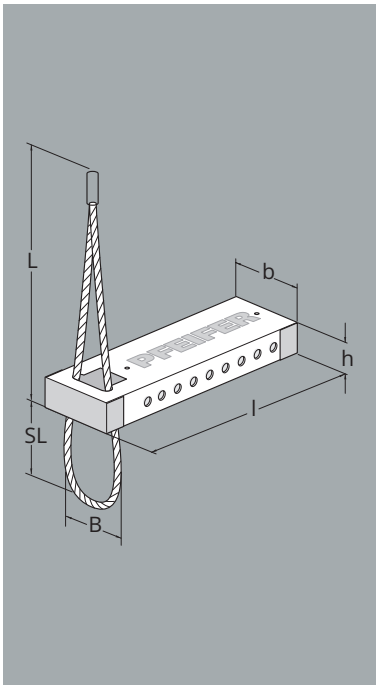

Use

- Wire rope loop boxes for the load bearing connection of precast elements
- VS® Boxes are used in pairs and installed opposite each other
- They are connected by threading a reinforcement bar though their overlapping loops. The joint is then cast in place with a suitable mortar

Your advantages

- Flexibility guaranteed by case-specific box positioning
- Optimum profile for optimum connection
- Low mortar consumption
- Colour-coded seal slider for easy assignment

Component recommendation

✓ Precast wall (non-load bearing/structural)

✓ Column

VS® Box CLASSIC – galvanized steel

Ref. no.	Type	Colour clip	Dimensions						Number of loops	Load carrier	Packing unit	Weight approx.	Price plus RTZ
			l [mm]	b [mm]	h [mm]	L [mm]	SL [mm]	B [mm]	n [pieces]	[pieces]	[pieces]	[kg/100 pcs]	[EUR/pcs]
389149	**VS®-B-C-60**	yellow	160	45	20	212	60	50	1	2640/3300	110	20.60	**4.35**
389146	**VS®-B-C-80**	black	160	50	20	212	80	50	1	2640/3300	110	20.60	**4.35**
389147	**VS®-B-C-100**	white	160	50	20	212	100	62	1	2640/3300	110	20.80	**4.35**
389148	**VS®-B-C-120**	window grey	160	50	20	212	120	70	1	2640/3300	110	20.90	**4.35**

FS Box LIGHT approved

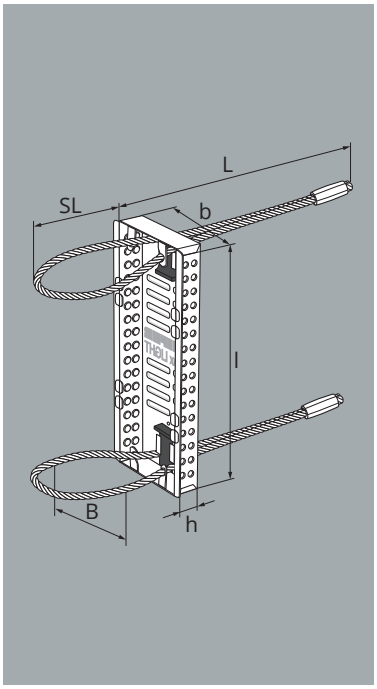

Use

- Wire rope loop boxes for the load bearing connection of different precast elements: Precast element – in-situ concrete/semi-precast concrete – in-situ concrete/semi-precast, semi-cast element – semi-precast element
- The wire rope loops of the FS Box LIGHT engage in the in-situ concrete area of a wall when installed and, in combination with the crossbar installed by the customer, guarantee a load bearing connection of the elements

Your advantages

- Approval with high rated resistances in all directions
- Time saving – flexible wire rope loops automatically jump to the target position
- Safety – no rigid bars sticking out of the concrete
- Easy installation – any arrangement
- General Building Authority Approval (abZ)

Component recommendation

✓ Precast wall (load bearing)

✓ Precast wall (non-load bearing/structural)

✓ Double wall/semi-precast wall

✓ Column

FS Box LIGHT – galvanized steel

Ref. no.	Type	Colour clip	Dimensions						Number of loops	Load carrier	Packing unit	Weight approx.	Price plus RTZ
			l [mm]	b [mm]	h [mm]	L [mm]	SL [mm]	B [mm]	n [pieces]	[pieces]	[pieces]	[kg/100 pcs]	[EUR/pcs]
378521	**FSB-L**	lime green	220	80	25	217	100	75	2	250	250	45.00	**12.05**

VS®-accesories

Use

- Magnetic elements for formwork fixing of VS® products
- Replacement tape for VS® Bars and Rails where the factory applied tape is loose or damaged

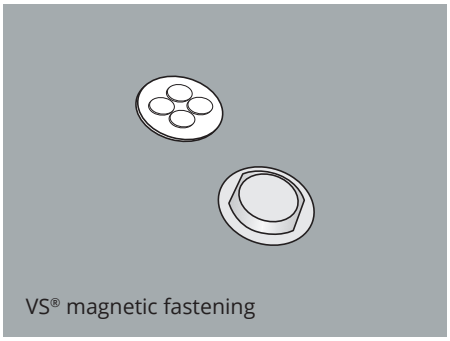

VS® magnetic fastening

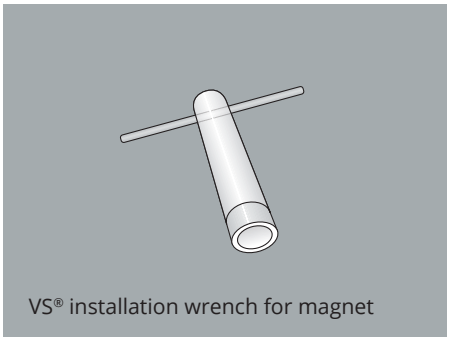

VS® installation wrench for magnet

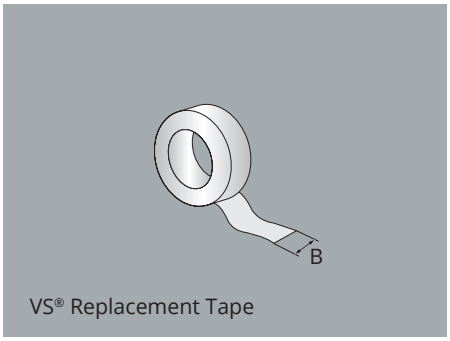

VS® Replacement Tape

VS® Magnetic Fastening – galvanized steel

Ref. no.	Type	For type	Packing unit	Weight approx.	Price plus RTZ
			[pieces]	[kg/100 pcs]	[EUR/pcs]
169809	**VS®-MB**	VSB-80/100/120	1	8.00	**41.00**

VS® installation wrench for magnetic fastening – black steel

Ref. no.	Type	For type	Packing unit	Weight approx.	Price plus RTZ
			[pieces]	[kg/100 pcs]	[EUR/pcs]
176435	**VS®-MS**	VSB-80/100/120	1	60.00	**41.00**

VS® Replacement Tape

Ref. no.	Type	For type	B	Länge	Packing unit	Weight approx.	Price plus RTZ
			[mm]	[m/Rolle]	[pieces]	[kg/100 pcs]	[EUR/pcs]
175678	**VS®-ET-68**	VS®-Leiste	68	50	50	88.00	**34.50**
257382	**VS®-ET-78**	VS®-Schiene	78	50	50	105.00	**37.00**

Component recommendations – Wire rope loop connections

	load-bearing connections (regulated with approvals)						non-load-bearing/structural connections					
Wire rope loop connection Type	Precast wall – precast wall	Precast wall – precast column	Precast wall – semi-precast wall	Precast wall – in-situ concrete wall	Semi-precast wall – precast column	Semi-precast wall – semi-precast wall	Precast wall – precast wall	Precast wall – precast column	Precast wall – semi-precast wall	Precast wall – in-situ concrete wall	Semi-precast wall – precast column	Semi-precast wall – semi-precast wall
VS® ISI Bar/Rail	✓	✓					✓	✓				
VS® BZ Rail	✓						✓					
VS® T Bar/Rail							✓	✓				
VS® W Rail							✓					
VS® Slim Box EASYFILL	✓	✓					✓	✓				
VS® Box EASYFILL							✓	✓				
VS® Box Classic							✓	✓				
FS Box LIGHT			✓	✓	✓	✓			✓		✓	✓

Combination options – Wire rope loop connections

	Wire rope loop connection type						
Mortar	VS® ISI system	VS® BZ System	VS® Slim Box EASYFILL	VS®-T20/T50	VS®-W50	VS® Box EASYFILL	VS® Box CLASSIC
VS® PAGEL® GROUT	✓	✓		✓	✓	✓	✓
VS® P PAGEL® JOINT FILLING MORTAR		✓		✓	✓	✓	✓
EuroGrout® Varix	✓		✓	✓	✓	✓	✓
EuroGrout® Universal Filler	✓		✓	✓	✓	✓	
BETEC® Grouting	✓		✓	✓	✓	✓	✓
BETEC® Thixo	✓		✓	✓	✓	✓	
Comparable grouting material				✓	✓	✓	✓
Comparable joint filling mortar with plastic/thixotropic properties				✓	✓	✓	

new

VS®-ISI-System^{3D} fire prevention

The complete solution for your fire wall

New approval with very high security standard in case of fire:

- Carrying capacities for fire resistance classes up to 90 minutes
- Supporting and non-supporting fire walls can be implemented
- General building authority approved system in case of fire
- Dimensioning values in case of fire for tensile force as well as shear force parallel to and perpendicular to the joint
- Various mortar systems – thixotropic, free-flowing mortar or grout
- Fire verification with free software

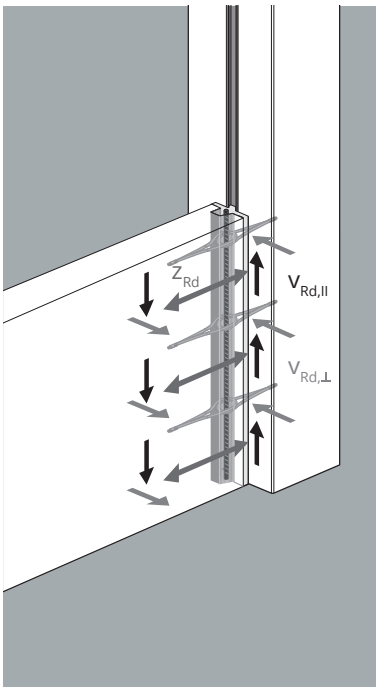

Transferable resistances in case of fire:

Building authority fire protection requirements	Fire resistance classes		Resistances of fire-exposed components						
			Proof of limitation of the stress			Proof of the calculation of the resistance in case of fire (Appendix 13)			
	gem. DIN 4102	gem. DIN EN 13501	Z_{Rd}	$v_{Rd,II}$	$v_{Rd,\perp}$	Z_{Rd}	$v_{Rd,II}$	$v_{Rd,\perp}$	$Z_{Rd} + v_{Rd,II}$
fire-retardant	F30	REI 30	2,5 kN/m	$v_{Rd,II}$ [1]	2,5 kN/m	Z_{Rd} [2]	$v_{Rd,II}$ [2]	2,5 kN/m	Z_{Rd} [2] + $v_{Rd,II}$ [2]
highly fire-retardant	F60	REI 60							
fire-resistant	F90	REI 90							
Fire wall	Brandwand	REI 90-M				–	–	–	–

[1] fulfilled with the proof in the cold case
[2] reduced resistances according to approval no. Z-21.8-1929 Annex 13, Table 6

Permissible mortar systems at different fire load levels

Building authority fire protection requirements	Fire resistance classes		Permissible mortar systems at different fire load levels			
			Casting mortar		Thixotropic, plastic joint filling mortar	
	gem. DIN 4102	gem. DIN EN 13501	EuroGrout® Varix	BETEC®-Verguss	EuroGrout® universal filler	BETEC®-Thixo
fire-retardant	F30	R30	✓	✓	✓	✓
highly fire-retardant	F60	R60	✓	✓	✓	✓
fire-resistant	F90	R90	✓	✓	✓	✓
Brandwand	Fire wall	REI-M30/60/90	✓	✓	✓	✓

To the free dimensioning software:

Including fire proof!

Download the PFEIFER Suite now at:
www.pfeifer-suite.info

Screw connection system

The screw connection system includes various products for the load bearing connection of precast elements. Column Shoes are used in combination with foundation anchors for the rigid connection of precast concrete columns to each other, with foundations or as a connection for transoms. Wall Shoes can also be used in combination with foundation anchors to connect two precast walls on the and erside or to connect the wall to the foundation. The screw connection system brings a significant time saving compared to conventional systems.

Your advantages

- Simple, load bearing screw connection of concrete elements
- Extremely rapid mounting
- Additional supports can be omitted
- Shorter construction times and thus lower costs

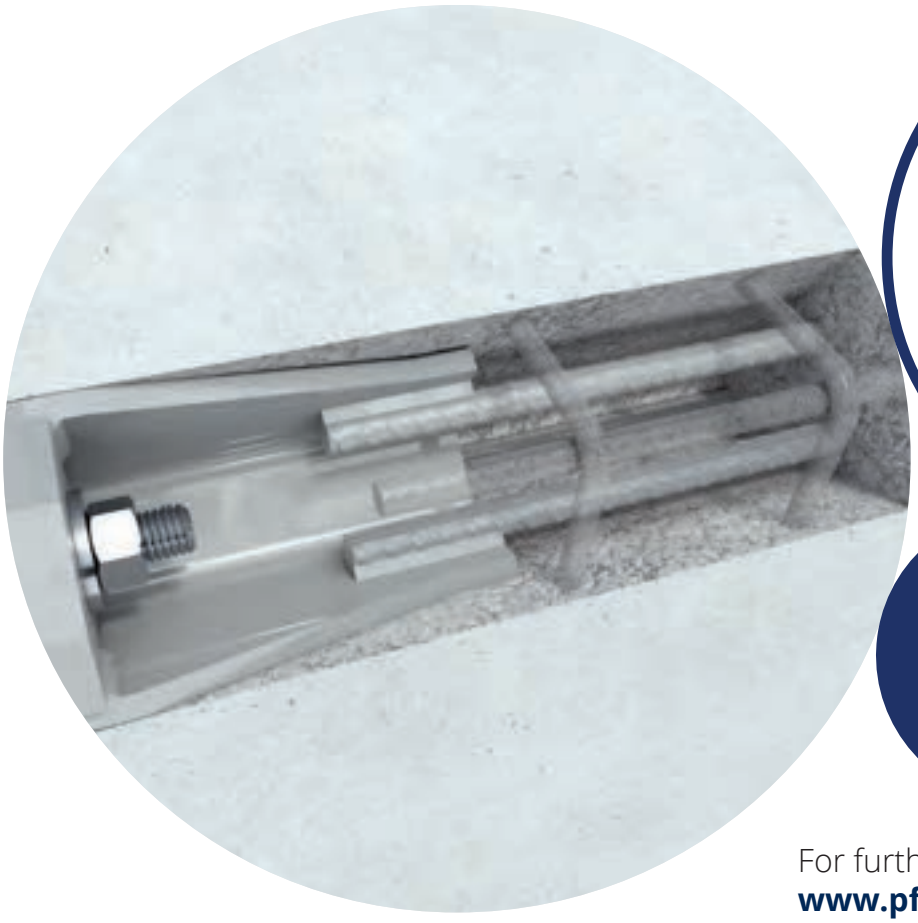

For further information, go to
www.pfeifer.info/column-shoe-system

Screw connection system

Anchoring elements

PCC Column Shoe 206
PWS Wall Shoe 207
PWC Wall Shoe 208

Anchor

PGS/G1 Foundation Anchor 209
PGS/G2 Foundation Anchor 210
PGS/G3 Foundation Anchor 211
PGS/G1-K Foundation Anchor 215
PGS/G2-K, G3-K and G4-K foundation anchors for PCC 216
PGS/G1-DK Foundation Anchor 217
PGS/H2 Foundation Anchor 218
PGS/H4 Foundation Anchor 219
Foundation anchor sets 222
with UP shim plate for PWC 222
PH-MU Female Bar 224

Fasteners

PVB/PGV Connect Bolt 225
PAP Connect Bolt 226
PCC Positioning Socket 227
PCC Retaining Bush 228

Accesories

Fixing screw for screw connection system 229
Moulding Insert, corner installation 230
Moulding Insert, side installation 232
Thread protection plugs for foundation anchors 233
Cover Plate 234

Technical information

Component recommendations
Screw connections 235
Combination options – Assembly accessories 235

Dimensioning software now download free of charge at:
www.pfeifer.info/pcc-rating

PCC Column Shoe

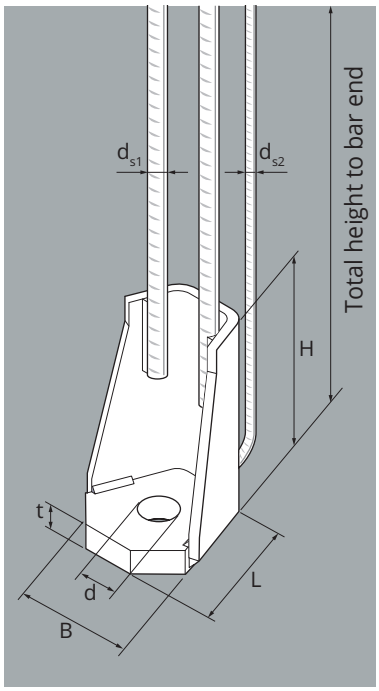

Use

- For rigid bolted connections in precast concrete elements
- Use in combination with foundation anchors or female bars
- Column Shoe and foundation anchor/female bar are each concreted into one component and can be bolted together for connection. Recesses are then cast

Your advantages

- Fast assembly process without supports
- Immediate load-bearing screw connections mean no delay
- Flexibility supplied by practice-orientated tolerance ranges
- Weather-independent installation – even in frost
- Easy to connect to existing reinforcement (overlapping joint)
- Efficient transport of precast elements by separating column and foundation
- No reduction of load-bearing properties in the event of fire
- Free dimensioning software
- Type-approved
- European Technical Assessment (ETA)

Component recommendation

☑ Column ☑ Girders ☑ Joist

PCC Column Shoe – black steel

Ref. no.	Type	Dimensions									Load carrier	Packing unit	Weight approx.	Price plus RTZ
		Overall height [mm]	L_s [1] [mm]	d [mm]	L [mm]	B [mm]	t [mm]	H [mm]	d_{s1} [mm]	d_{s2} [mm]	[pieces]	[pieces]	[kg/pcs]	[EUR/pcs]
273703	PCC-16	745	650	28	90	89	15	145	12	8	190	190	2.61	**16.45**
273704	PCC-20	910	800	30	95	97	20	170	14	8	100	100	4.81	**24.10**
273705	PCC-24	1125	1000	35	100	100	25	190	16	10	88	88	7.89	**30.90**
273706	PCC-30-1	1400	1260	40	112	119	30	230	20	12	78	78	15.25	**52.60**
273707	PCC-30-2	1505	1360	45	121	119	35	250	25	16	52	52	20.50	**80.20**
273708	PCC-36	1950	1780	53	119	132	40	285	28	20	40	40	33.72	**115.50**
438692	PCC-39-1	1690	1520	55	125	136	35	285	28	14	–	–	25.80	**119.50**
438693	PCC-39-2	1970	1800	55	125	132	40	300	32	16	–	–	37.30	**175.50**

[1] Overlap length corresponds to total bar length for concrete quality C30/37, good bond.Different lengths available on request.

PWS Wall Shoe

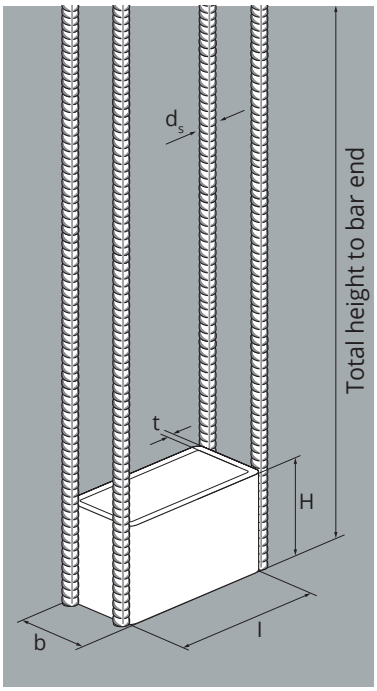

Use

- For screw connection of stiffening concrete wall constructions
- Absorption and transmission of tensile forces acting perpendicular to the joint as well as transversal shear forces in the longitudinal axes of the joint
- Wall shoes are installed in the wall element and bolted to foundation anchors located in the foundation or in a wall below. Alternatively, two wall shoes can be connected with a bolt. Recesses are then cast

Your advantages

- Flexibility supplied by practice-orientated tolerance ranges
- Can be used from the thinnest walls from 160 mm
- Complete system for the transmission of tensile and transversal shear forces
- Cast with prepared grout mix
- Shorter construction times and thus lower costs
- Type-approved

Component recommendation

✓ Precast wall

Wandschuh PWS – black steel

Ref. no.	Type	Dimensions							Load carrier	Packing unit	Weight approx.	Price plus RTZ
		Overall height [mm]	L_s [1] [mm]	l [mm]	b [mm]	H [mm]	t [mm]	d_s [mm]	[pieces]	[pieces]	[kg/pcs]	[EUR/pcs]
199442	**PWS-120**	880	880	148	60	80	8.0	14	40	1	6.00	**41.60**
199443	**PWS-200**	1360	1360	152	64	95	8.0	16	30	1	10.84	**48.50**
199444	**PWS-330**	1660	1660	180	80	120	10.0	20	24	1	20.00	**85.80**
199445	**PWS-400**	1740	1740	190	100	140	10.0	25	25	1	30.00	**181.00**
199446	**PWS-650**	2330	2330	236	112	165	14.2	28	–	1	55.00	**231.50**
199447	**PWS-900**	2540	2540	244	128	190	14.2	32	–	1	73.00	**284.50**

[1] Overlap length corresponds to total bar length for concrete quality C30/37, good bond.Different lengths available on request.

CE

new

PWC Wall Shoe

Use

- For the dry screw connection of stiffening wall structures made of concrete
- Absorbance and transmission of tensile forces acting perpendicular to the joint
- Wall shoes are installed in the wall element and bolted to foundation anchors located in the foundation or in a wall below.
- Recesses are then cast
- Requires foundation anchor sets with UP shim plate (available separately)

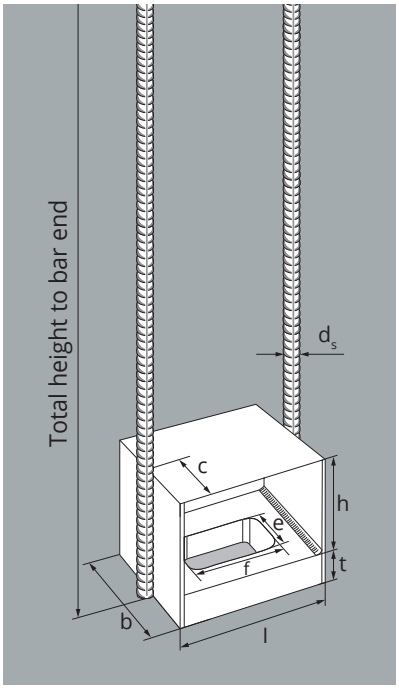

Your advantages

- Fast simple installation of the wall connections
- Complete system for the transmission of tensile forces
- High assembly tolerances
- Detailed instructions for reinforcement layout
- Type tested

Component recommendation

✓ Precast wall

PWC Wall Shoe – bright steel

Ref. no.	Type	Dimensions									Packing unit	Weight approx.	Price plus RTZ
		l [mm]	b [mm]	h [mm]	t [mm]	e [mm]	f [mm]	d_s [mm]	c^{+-2mm} [mm]	Overall height [mm]	[pieces]	[kg/pcs]	[EUR/pcs]
475602	**PWC-16**	125	80	87	25	36	76	14	40.0	578	1	3.66	**on request**
475603	**PWC-20**	132	90	97	30	40	80	16	45.0	978	1	6.29	**on request**
475604	**PWC-24**	147	110	102	35	49	84	20	55.0	1078	1	10.14	**on request**
475605	**PWC-30**	156	120	117	40	55	90	25	60.0	1328	1	16.82	**on request**
475606	**PWC-36**	161	130	132	50	61	96	25	65.0	1890	1	23.20	**on request**
475607	**PWC-39**	180	145	132	50	64	99	28	72.5	1970	1	30.30	**on request**
475608	**PWC-30-HF**	161	130	132	45	55	90	28	65.0	1590	1	23.70	**on request**
475609	**PWC-36-HF**	180	150	132	55	61	96	32	75.0	1955	1	37.35	**on request**

CE

PGS/G1 Foundation Anchor

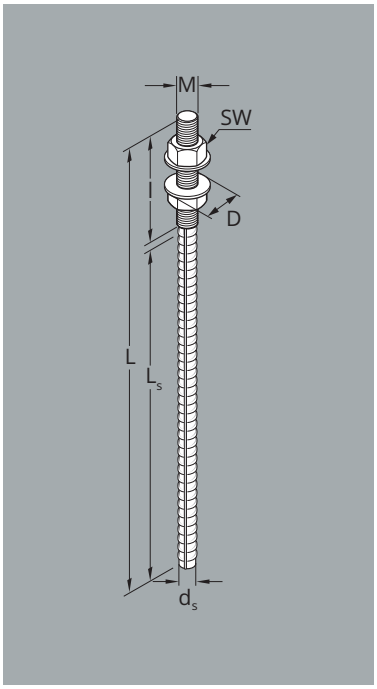

Use

- Anchor with straight bar for anchoring static loads in the concrete base
- Transfer of loads into the component via bond through an end anchorage or overlapping joint according to standard
- Use in combination with column shoes
- Foundation anchor and column shoe are each concreted into one component and can be bolted together for connection via the integrated threaded bolt. Recesses are then cast

Your advantages

- Permits slim structural element dimensions
- No additional Connect bolts required
- Simple screw connection with column shoe via integrated bolt
- Subsequent adjustment and er load possible with the aid of nuts
- Rigid load-bearing connection
- Free dimensioning software
- General Building Authority Approval (abZ)

Component recommendation

✓ Column ✓ Foundation

PGS/G1 Foundation Anchor – black steel

Ref. no.	Type	Thread size	Dimensions						Load carrier	Packing unit	Weight approx.	Price plus RTZ
			L [mm]	L_s [mm]	l [mm]	SW [mm]	D [mm]	d_s [mm]	[pieces]	[pieces]	[kg/pcs]	[EUR/pcs]
281811	**PGS-16/G1-790**	M 16	790	690[1)]	100	24	45	16	100	1	1.37	**9.75**
282359	**PGS-16/G1-1270**	M 16	1270	1170[2)]	100	24	45	16	100	1	2.13	**10.65**
281813	**PGS-20/G1-970**	M 20	970	860[1)]	110	30	45	20	100	1	2.70	**11.75**
282360	**PGS-20/G1-1570**	M 20	1570	1460[2)]	110	30	45	20	100	1	4.18	**13.45**
281814	**PGS-24/G1-1110**	M 24	1110	990[1)]	120	36	55	25	100	1	4.71	**17.15**
282361	**PGS-24/G1-1810**	M 24	1810	1690[2)]	120	36	55	25	100	1	7.41	**19.95**
281815	**PGS-30/G1-1360**	M 30	1360	1220[1)]	140	46	65	32	50	1	9.35	**28.05**
282362	**PGS-30/G1-2230**	M 30	2230	2090[2)]	140	46	65	32	50	1	14.84	**45.10**
281816	**PGS-36/G1-1740**	M 36	1740	1570[1)]	170	55	75	40	50	1	16.90	**62.20**
282363	**PGS-36/G1-2820**	M 36	2020	1850[2)]	170	55	75	40	50	1	26.96	**111.00**
375783	**PGS-39/G1-1710**	M 39	2020	1850[1)]	170	60	75	40	50	1	17.80	**73.00**
375785	**PGS-39/G1-2760**	M 39	3330	3160[2)]	170	60	75	40	50	1	28.50	**117.00**

[1)] Overlap length for concrete quality C25/30, good bond (EN 1992-1-1:2004).
[2)] Overlap length for concrete quality C30/37, moderate bond (DIN EN 1992-1-1/NA:2013-04). Different lengths available on request.

PGS/G2 Foundation Anchor

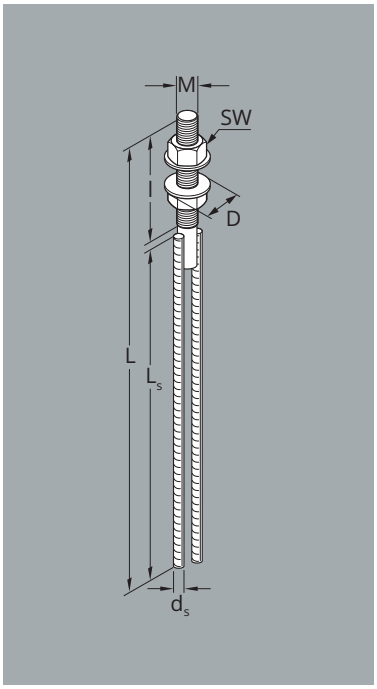

Use

- Anchor with two straight bars for anchoring static loads in the concrete base
- Transfer of loads into the component via bond through an end anchorage or overlapping joint according to standard
- Use in combination with column shoes
- Foundation anchor and column shoe are each concreted into one component and can be bolted together for connection via the integrated threaded bolt. Recesses are then cast

Your advantages

- Permits thinner foundations
- No additional Connect bolts required
- Simple screw connection with column shoe via integrated bolt
- Subsequent adjustment and er load possible with the aid of nuts
- Rigid load-bearing connection
- Free dimensioning software
- General Building Authority Approval (abZ)

Component recommendation

☑ Column ☑ Foundation

PGS/G2 Foundation Anchor – black steel

Ref. no.	Type	Thread size	Dimensions						Load carrier	Packing unit	Weight approx.	Price plus RTZ
			L [mm]	L_s [1] [mm]	l [mm]	SW [mm]	D [mm]	d_s [mm]	[pieces]	[pieces]	[kg/pcs]	[EUR/pcs]
176066	**PGS-24/G2**	M 24	770	635	120	36	55	16	50	1	3.2	**41.30**
176067	**PGS-30/G2**	M 30	1025	870	140	46	65	25	50	1	8.9	**62.70**
176068	**PGS-36/G2**	M 36	1310	1125	170	55	75	28	50	1	14.8	**77.00**
448465	**PGS-39/G2**	M 39	1520	1335	170	60	75	28	50	1	17.3	**111.00**
176069	**PGS-42/G2**	M 42	1485	1290	180	65	78	32	50	1	21.8	**140.00**
176070	**PGS-48/G2**	M 48	1735	1530	190	75	92	40	25	1	38.2	**187.50**
176071	**PGS-56/G2**	M 56	2005	1780	210	85	105	40	25	1	46.2	**273.00**

[1] Overlap length corresponds to total bar length for concrete quality C20/25, good bond.Different lengths available on request.

PGS/G3 Foundation Anchor

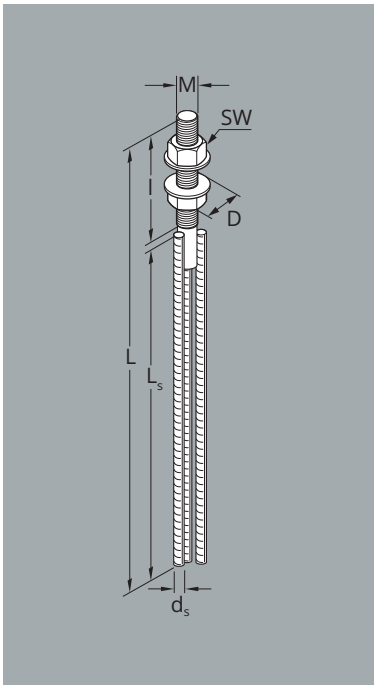

Use

- Anchor with three straight bars for anchoring static loads in the concrete base
- Transfer of loads into the component via bond through an end anchorage or overlapping joint according to standard
- Use in combination with column shoes
- Foundation anchor and column shoe are each concreted into one component and can be bolted together for connection via the integrated threaded bolt. Recesses are then cast

Your advantages

- Permits thinner foundations
- No additional Connect bolts required
- Simple screw connection with column shoe via integrated bolt
- Subsequent adjustment and er load possible with the aid of nuts
- Rigid load-bearing connection
- Free dimensioning software
- General Building Authority Approval (abZ)

Component recommendation

☑ Column ☑ Foundation

Fundamentanchor PGS/G3 – black steel

Ref. no.	Type	Thread size	Dimensions						Load carrier	Packing unit	Weight approx.	Price plus RTZ
			L [mm]	L_s [1)] [mm]	l [mm]	SW [mm]	D [mm]	d_s [mm]	[pieces]	[pieces]	[kg/pcs]	[EUR/pcs]
176060	**PGS-24/G3**	M 24	700	565	120	36	55	12	50	1	3.45	**52.00**
176061	**PGS-30/G3**	M 30	890	735	140	46	65	20	50	1	7.02	**59.40**
176062	**PGS-36/G3**	M 36	1040	855	170	55	75	25	50	1	12.62	**106.50**
448569	**PGS-39/G3**	M 39	1195	1010	170	60	75	25	50	1	14.90	**134.50**
176063	**PGS-42/G3**	M 42	1150	955	180	65	78	28	30	1	19.40	**156.50**
176064	**PGS-48/G3**	M 48	1245	1040	190	75	92	32	30	1	29.60	**190.00**
176065	**PGS-56/G3**	M 56	1605	1380	210	85	105	32	20	1	48.88	**297.00**

[1)] Overlap length corresponds to total bar length for concrete quality C20/25, good bond. Different lengths available on request.

Foundation Anchor PGS/G1, G2 and G3 special lengths

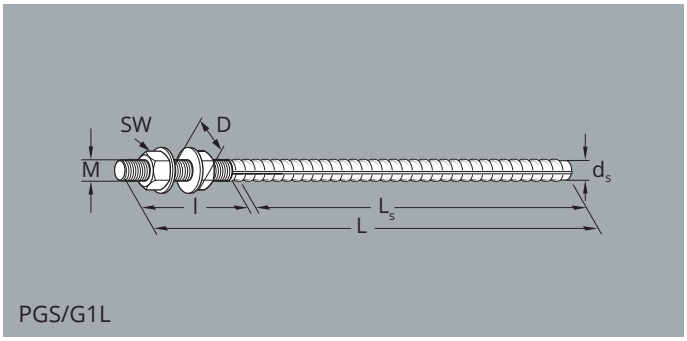

PGS/G1L

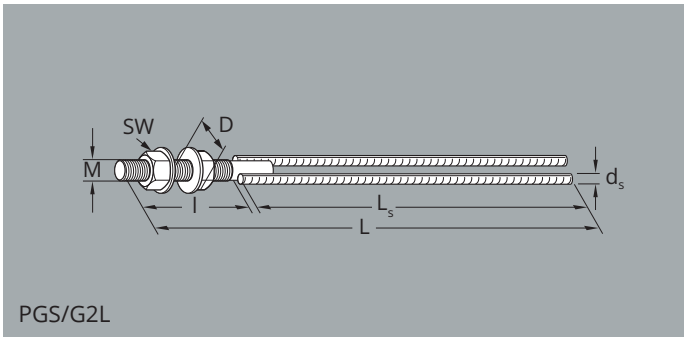

PGS/G2L

PGS/G1L Foundation Anchor in special length – black steel

Ref. no.	Type	Thread size	Dimensions					Price plus RTZ
			L [mm]	l [mm]	SW [mm]	D [mm]	d_s [mm]	[EUR/pcs]
020331	PGS-16/G1L	M 16	Customer specification	100	24	45	16	on request
020332	PGS-20/G1L	M 20	Customer specification	110	30	45	20	on request
020333	PGS-24/G1L	M 24	Customer specification	120	36	55	25	on request
020334	PGS-30/G1L	M 30	Customer specification	140	46	65	32	on request
020335	PGS-36/G1L	M 36	Customer specification	170	55	75	40	on request
020424	PGS-39/G1L	M 39	Customer specification	170	60	75	40	on request

PGS/G2L Foundation Anchor in special length – black steel

Ref. no.	Type	Thread size	Dimensions					Price plus RTZ
			L [mm]	l [mm]	SW [mm]	D [mm]	d_s [mm]	[EUR/pcs]
020624	PGS-24/G2L	M 24	Customer specification	120	36	55	16	on request
020625	PGS-30/G2L	M 30	Customer specification	140	46	65	25	on request
020626	PGS-36/G2L	M 36	Customer specification	170	55	75	28	on request
020627	PGS-39/G2L	M 39	Customer specification	170	60	75	28	on request
020628	PGS-42/G2L	M 42	Customer specification	180	65	78	32	on request
020629	PGS-48/G2L	M 48	Customer specification	190	75	92	40	on request
020630	PGS-56/G2L	M 56	Customer specification	210	85	105	40	on request

Foundation Anchor PGS/G3 special lengths

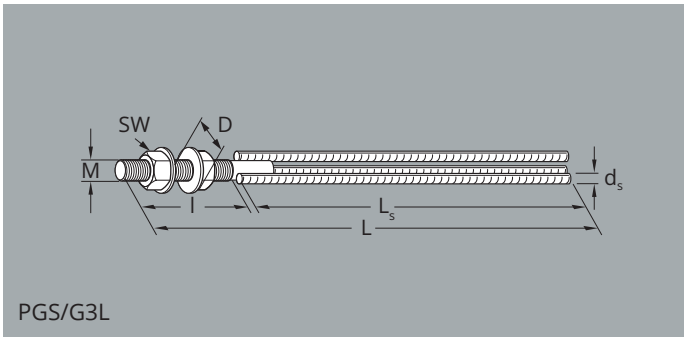

PGS/G3L

PGS/G3L Foundation Anchor in special length – black steel

Ref. no.	Type	Thread size	Dimensions					Price plus RTZ
			L [mm]	l [mm]	SW [mm]	D [mm]	d_s [mm]	[EUR/pcs]
020631	**PGS-24/G3L**	M 24	Customer specification	120	36	55	12	**on request**
020632	**PGS-30/G3L**	M 30	Customer specification	140	46	65	20	**on request**
020633	**PGS-36/G3L**	M 36	Customer specification	170	55	75	25	**on request**
020634	**PGS-39/G3L**	M 39	Customer specification	170	60	75	25	**on request**
020635	**PGS-42/G3L**	M 42	Customer specification	180	65	78	28	**on request**
020636	**PGS-48/G3L**	M 48	Customer specification	190	75	92	32	**on request**
020637	**PGS-56/G3L**	M 56	Customer specification	210	85	105	32	**on request**

Foundation Anchor PGS/G1 and G2 bent

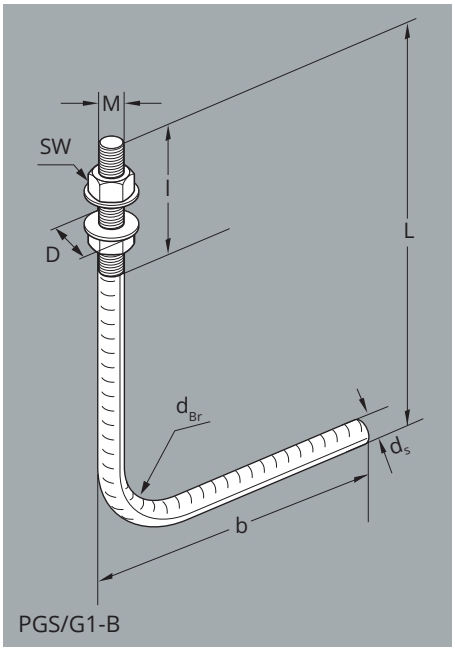

PGS/G1-B

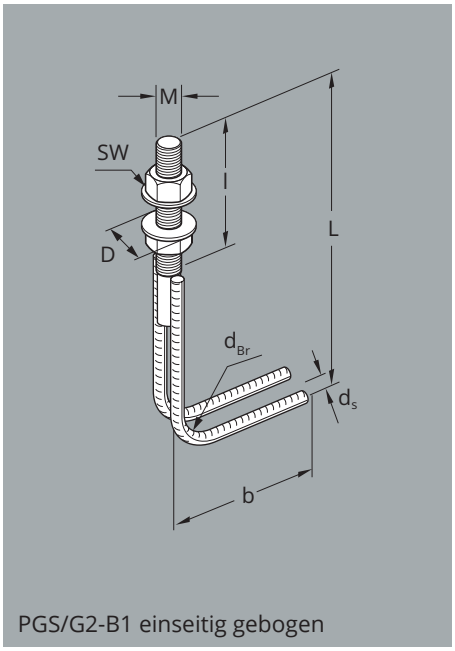

PGS/G2-B1 einseitig gebogen

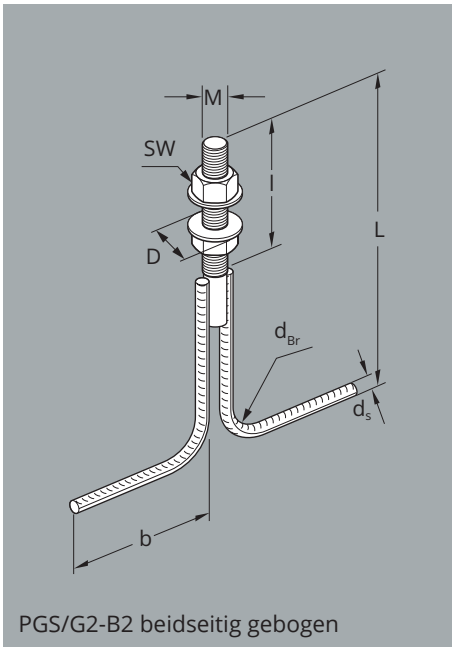

PGS/G2-B2 beidseitig gebogen

Foundation Anchor PGS/G1-B bent – black steel

Ref. no.	Type	Thread size	Dimensions					Price plus RTZ
			l [mm]	D [mm]	d_s [mm]	$d_{Br\ min}$ [mm]	L/b/d_{Br} [mm]	[EUR/pcs]
020337	PGS-16/G1-B	M 16	100	45	16	60	Customer specification	on request
020338	PGS-20/G1-B	M 20	110	45	20	133	Customer specification	on request
020339	PGS-24/G1-B	M 24	120	55	25	165	Customer specification	on request
020340	PGS-30/G1-B	M 30	140	65	32	220	Customer specification	on request
020341	PGS-36/G1-B	M 36	170	75	40	300	Customer specification	on request

PGS/G2-B1 Foundation Anchor bent on one side – black steel

Ref. no.	Type	Thread size	Dimensions							Price plus RTZ
			l [mm]	D [mm]	d_s [mm]	d_{Br} [mm]	L/b/$d_{Br\ min}$ [mm]	L_{min} [mm]	b_{min} [mm]	[EUR/pcs]
020302	PGS-24/G2-B1	M 24	120	55	16	160	Customer specification	312	176	on request
020303	PGS-30/G2-B1	M 30	140	65	25	250	Customer specification	430	275	on request
020304	PGS-36/G2-B1	M 36	170	75	28	280	Customer specification	496	308	on request
020305	PGS-42/G2-B1	M 42	180	78	32	320	Customer specification	549	352	on request
020306	PGS-48/G2-B1	M 48	190	92	40	400	Customer specification	645	440	on request
020307	PGS-56/G2-B1	M 56	210	105	40	400	Customer specification	645	440	on request

PGS/G2-B2 Foundation Anchor bent on both sides – black steel

Ref. no.	Type	Thread size	Dimensions							Price plus RTZ
			l [mm]	D [mm]	d_s [mm]	$d_{Br\ min}$ [mm]	L/b/d_{Br} [mm]	L_{min} [mm]	b_{min} [mm]	[EUR/pcs]
020216	PGS-24/G2-B2	M 24	120	55	16	160	Customer specification	312	176	on request
020217	PGS-30/G2-B2	M 30	140	65	25	250	Customer specification	430	275	on request
020218	PGS-36/G2-B2	M 36	170	75	28	280	Customer specification	496	308	on request
020219	PGS-42/G2-B2	M 42	180	78	32	320	Customer specification	549	352	on request
020220	PGS-48/G2-B2	M 48	190	92	40	400	Customer specification	645	440	on request
020221	PGS-56/G2-B2	M 56	210	105	40	400	Customer specification	645	440	on request

PGS/G1-K Foundation Anchor

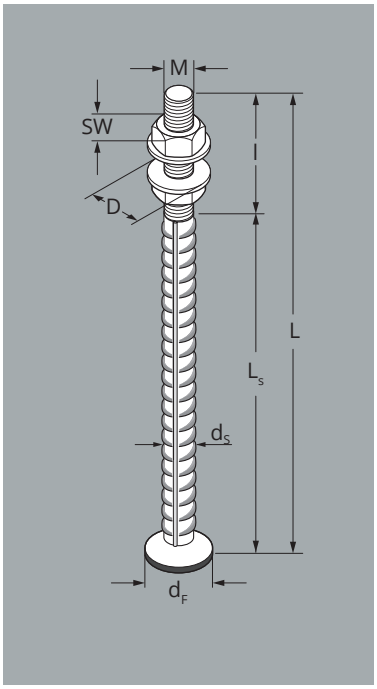

Use

- Anchor with swaged anchor foot for anchoring static loads in the concrete base
- Use in combination with column shoes
- Foundation anchor and column shoe are each concreted into one component and can be bolted together for connection via the integrated threaded bolt. Recesses are then cast

Your advantages

- Low anchor height for less interference in the component
- No additional Connect bolts required
- Simple screw connection with column shoe via integrated bolt
- Subsequent adjustment and er load possible with the aid of nuts
- Rigid load-bearing connection
- Free dimensioning software
- General Building Authority Approval (abZ)
- European Technical Assessment (ETA)

Component recommendation

✓ Foundation

PGS/G1-K Foundation Anchor – black steel

Ref. no.	Type	Thread size	Dimensions							Load carrier	Packing unit	Weight approx.	Price plus RTZ
			L [mm]	L_s [mm]	l [mm]	SW [mm]	D [mm]	d_F [mm]	d_s [mm]	[pieces]	[pieces]	[kg/pcs]	[EUR/pcs]
281337	**PGS-16/G1-K**	M 16	280	180	100	24	45	38	16	100	1	0.90	**8.65**
281338	**PGS-20/G1-K**	M 20	350	240	110	30	45	46	20	100	1	1.20	**10.40**
281339	**PGS-24/G1-K**	M 24	430	310	120	36	55	55	25	100	1	2.20	**14.20**
281340	**PGS-30/G1-K**	M 30	550	410	140	46	65	70	32	100	1	3.70	**19.15**
281341	**PGS-36/G1-K**	M 36	700	530	170	55	75	80	40	100	1	6.90	**48.10**
289222	**PGS-39/G1-K**	M 39	750	580	170	60	75	80	40	100	1	7.78	**53.00**

PGS/G2-K, G3-K and G4-K foundation anchors for PCC

Use

- Anchor with two, three or four swaged anchor bases for the anchoring of static loads in the concrete base
- Introduction of the loads into the component via the anchor bases
- Use in combination with column shoes
- Foundation anchor and column shoe are each concreted into one component and can be bolted together for connection via the integrated threaded bolt. Recesses are then cast

Your advantages

- Thin foundations thickness are possible
- Low anchor height for less interference in the component
- No additional connecting bolts required
- Simple screw connection with column shoe via integrated bolt
- Subsequent adjustment under load possible with the aid of nuts
- Rigid load-bearing connection
- Free dimensioning software
- General technical approval (abZ)

Component recommendation

✓ Foundation

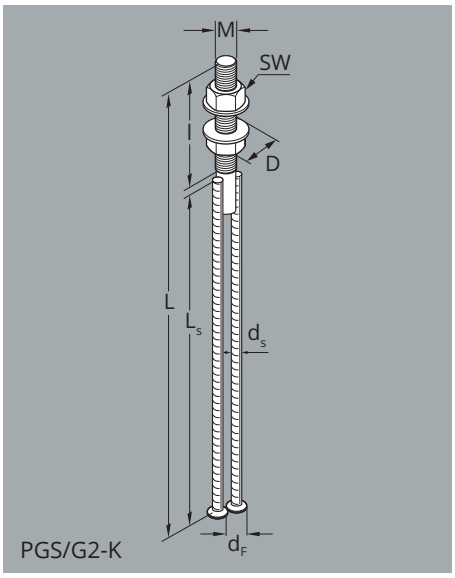

PGS/G2-K

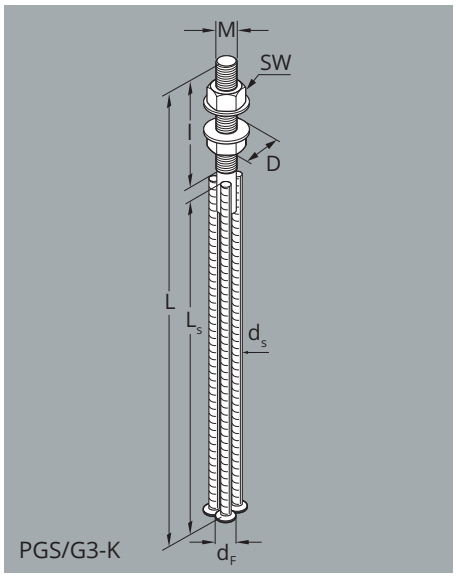

PGS/G3-K

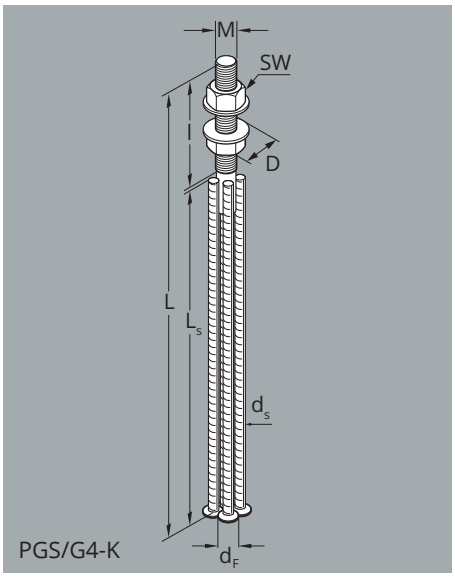

PGS/G4-K

PGS/G2-K, G3-K and G4-K foundation anchors – bright steel

Ref. no.	Type	Thread size	Dimensions							Packing unit	Weight approx.	Price plus RTZ
			L [mm]	L_s [mm]	l [mm]	SW [mm]	D [mm]	d_F [mm]	d_s [mm]	[pieces]	[kg/pcs]	[EUR/pcs]
506913	**PGS 30/G2-K**	M 30	655	500	140	46	65	55	25	1	6.38	**on request**
506914	**PGS 36/G4-K**	M 36	740	555	170	55	75	46	20	1	9.27	**on request**
506915	**PGS 39/G3-K**	M 39	880	675	190	60	75	55	25	1	12.70	**on request**
506916	**PGS 42/G4-K**	M 42	915	700	200	65	78	55	25	1	17.02	**on request**
506917	**PGS 45/G4-K**	M 45	980	765	200	70	85	55	25	1	18.67	**on request**
506918	**PGS 48/G3-K**	M 48	1015	800	200	75	92	70	32	1	24.07	**on request**
506919	**PGS 52/G4-K**	M 52	1140	890	235	80	98	70	32	1	34.29	**on request**
506920	**PGS 56/G4-K**	M 56	1265	1000	250	85	105	70	32	1	38.27	**on request**
506921	**PGS 60/G4-K**	M 60	1330	1055	260	90	110	70	32	1	41.43	**on request**

PGS/G1-DK Foundation Anchor

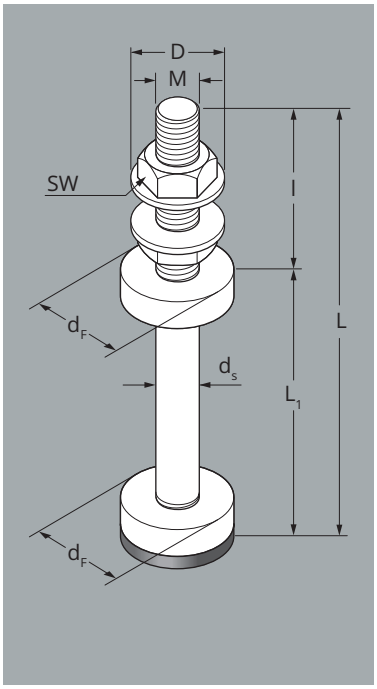

Use

- Anchor with two pressure plates for anchoring static loads in the concrete base
- The two pressure plates allow the highest tensile and compression forces to be transmitted safely
- Use in combination with column shoes
- Foundation anchor and column shoe are each concreted into one component and can be bolted together for connection via the integrated threaded bolt. Recesses are then cast

Your advantages

- Minimum foundation thicknesses possible
- High design resistance values for tensile and compressive forces
- No additional Connect bolts required
- Simple screw connection with column shoe via integrated bolt
- Subsequent adjustment and er load possible with the aid of nuts
- Rigid load-bearing connection
- Free dimensioning software
- General Building Authority Approval (abZ)

Component recommendation

☑ Foundation

PGS/G1-DK Foundation Anchor – black steel

Ref. no.	Type	Thread size	Dimensions							Load carrier	Packing unit	Weight approx.	Price plus RTZ
			L [mm]	L_1 [mm]	l [mm]	SW [mm]	D [mm]	d_s [mm]	d_F [mm]	[pieces]	[pieces]	[kg/pcs]	[EUR/pcs]
222891	**PGS-16/G1-DK**	M 16	291	180	110	24	45	16	40	100	1	0.76	**29.60**
222892	**PGS-20/G1-DK**	M 20	361	240	120	30	45	20	50	100	1	1.48	**43.20**
222894	**PGS-24/G1-DK**	M 24	433	300	130	36	55	24	60	100	1	2.56	**57.30**
222895	**PGS-30/G1-DK**	M 30	642	490	150	46	65	30	85	100	1	5.99	**93.80**
222896	**PGS-36/G1-DK**	M 36	753	590	160	55	75	36	100	50	1	10.00	**140.00**
222897	**PGS-42/G1-DK**	M 42	884	715	170	65	78	42	115	50	1	15.00	**183.50**
222898	**PGS-48/G1-DK**	M 48	1015	825	190	75	92	48	130	25	1	23.00	**251.50**
222899	**PGS-56/G1-DK**	M 56	1215	1005	210	85	105	56	150	25	1	37.00	**369.00**

PGS/H2 Foundation Anchor

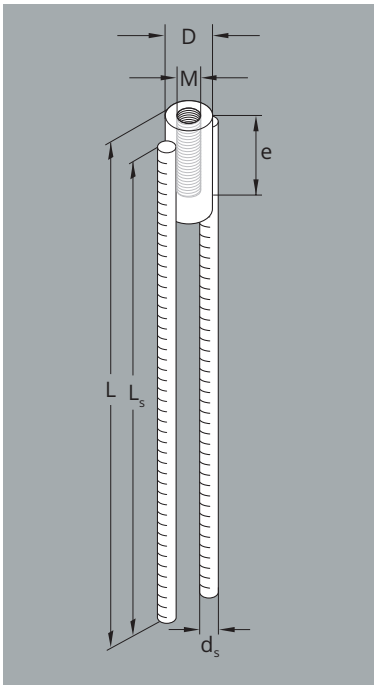

Use

- Anchor with two straight bars for anchoring static loads in the concrete base
- Transfer of loads into the component via bond through an end anchorage or overlapping joint according to standard
- Use in combination with column shoes or wall shoes and Connect bolts
- Foundation anchor and column/wall shoe each concreted into one component. Can be bolted together for connection via a separate Connect bolt. Recesses are then cast

Your advantages

- No obtrusive threaded bolts protruding from the structural element
- Permits thinner foundations
- Simple screw connection with column shoe/wall shoe via Connect bolt
- Rigid load-bearing connection
- Complete system for the transmission of tensile and transversal shear forces
- Free dimensioning software
- Type-approved

Component recommendation

☑ Column ☑ Foundation ☑ Precast wall

PGS/H2 Foundation Anchor – black steel

Ref. no.	Type	Thread size	Dimensions					Load carrier	Packing unit	Weight approx.	Price plus RTZ
			L [mm]	L_s [1] [mm]	e [mm]	D [mm]	d_s [mm]	[pieces]	[pieces]	[kg/pcs]	[EUR/pcs]
200809	**PGS-16/H2**	M 16	510	500	24	25	10	50	1	0.89	**19.40**
200811	**PGS-20/H2**	M 20	600	590	30	30	12	50	1	1.35	**22.30**
200812	**PGS-24/H2**	M 24	645	635	36	40	16	50	1	3.28	**29.70**
200813	**PGS-30/H2**	M 30	880	870	45	50	25	50	1	8.82	**38.80**
200814	**PGS-36/H2**	M 36	1135	1125	54	60	28	50	1	14.38	**52.30**
442416	**PGS-39/H2**	M 39	1345	1335	59	65	28	50	1	15.70	**66.20**
200815	**PGS-42/H2**	M 42	1300	1290	63	70	32	40	1	21.97	**89.60**
200816	**PGS-48/H2**	M 48	1540	1530	72	80	40	25	1	38.60	**147.00**
200817	**PGS-56/H2**	M 56	1790	1780	84	90	40	10	1	50.51	**211.50**

[1] Overlap length corresponds to total bar length for concrete quality C20/25, good bond. Different lengths available on request.

CE

PGS/H4 Foundation Anchor

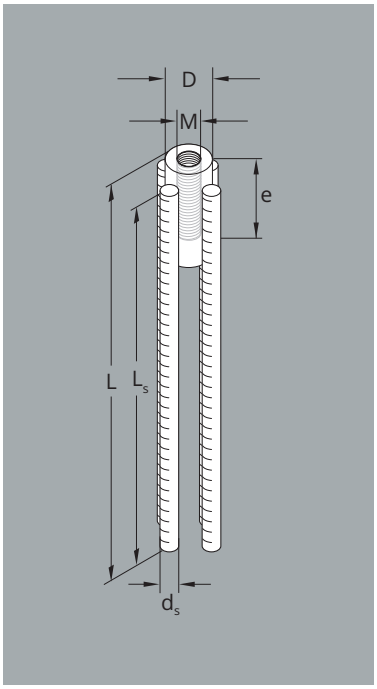

Use

- Anchor with four straight bars for anchoring static loads in the concrete base
- Transfer of loads into the component via bond through an end anchorage or overlapping joint according to standard
- Use in combination with column shoes or wall shoes and Connect bolts
- Foundation anchor and column/wall shoe each concreted into one component. Can be bolted together for connection via a separate Connect bolt. Recesses are then cast

Your advantages

- No obtrusive threaded bolts protruding from the structural element
- Permits thinner foundations
- Simple screw connection with column shoe/wall shoe via Connect bolt
- Rigid load-bearing connection
- Complete system for the transmission of tensile and transversal shear forces
- Free dimensioning software
- Type-approved

Component recommendation

✓ Column ✓ Precast wall ✓ Foundation

PGS/H4 Foundation Anchor – black steel

Ref. no.	Type	Thread size	Dimensions					Load carrier	Packing unit	Weight approx.	Price plus RTZ
			L [mm]	L_s [1)] [mm]	e [mm]	D [mm]	d_s [mm]	[pieces]	[pieces]	[kg/pcs]	[EUR/pcs]
200818	**PGS-20/H4**	M 20	375	365	30	35	10	50	1	1.50	**29.60**
200819	**PGS-24/H4**	M 24	445	435	36	40	12	50	1	2.71	**32.50**
200820	**PGS-30/H4**	M 30	705	695	45	50	16	50	1	6.19	**46.80**
200821	**PGS-36/H4**	M 36	815	805	54	60	20	20	1	10.94	**88.30**
442419	**PGS-39/H4**	M 39	960	950	59	65	20	20	1	12.20	**111.50**
200822	**PGS-42/H4**	M 42	860	850	63	70	25	20	1	18.31	**128.50**
200823	**PGS-48/H4**	M 48	1160	1150	72	80	25	20	1	24.41	**151.00**
200824	**PGS-56/H4**	M 56	1205	1195	84	90	28	20	1	40.57	**236.00**

[1)] Overlap length corresponds to total bar length for concrete quality C20/25, good bond. Different lengths available on request.

CE

PGS/H2 and H4 Foundation Anchor special lengths

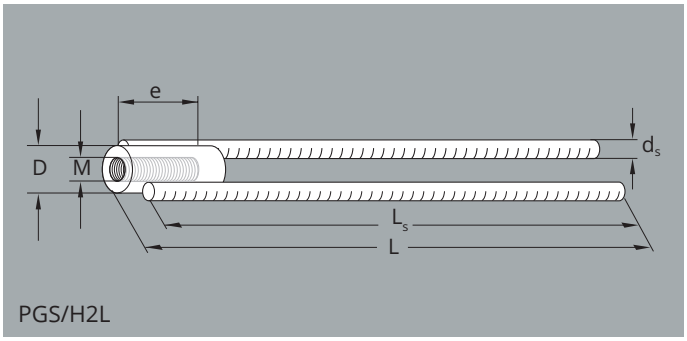

PGS/H2L

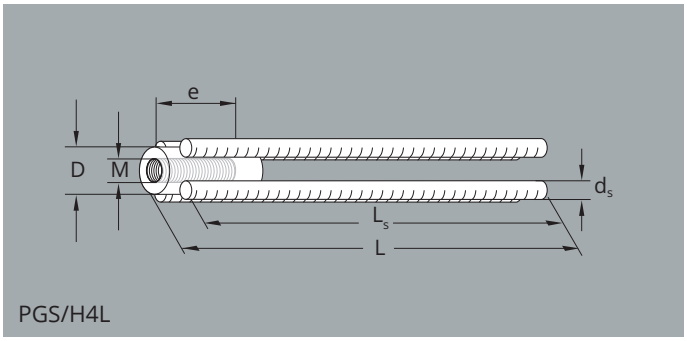

PGS/H4L

PGS/H2L Foundation Anchor in special length – black steel

Ref. no.	Type	Thread size	Dimensions				Price plus RTZ
			L [mm]	e [mm]	D [mm]	d_s [mm]	[EUR/pcs]
020246	PGS-16/H2L	M 16	Customer specification	24	25	10	on request
020247	PGS-20/H2L	M 20	Customer specification	30	30	12	on request
020248	PGS-24/H2L	M 24	Customer specification	36	40	16	on request
020249	PGS-30/H2L	M 30	Customer specification	45	50	25	on request
020250	PGS-36/H2L	M 36	Customer specification	54	60	28	on request
020251	PGS-39/H2L	M 39	Customer specification	59	65	28	on request
020252	PGS-42/H2L	M 42	Customer specification	63	70	32	on request
020253	PGS-48/H2L	M 48	Customer specification	72	80	40	on request
020254	PGS-56/H2L	M 56	Customer specification	84	90	40	on request

CE

PGS/H4L Foundation Anchor in special length – black steel

Ref. no.	Type	Thread size	Dimensions				Price plus RTZ
			L [mm]	e [mm]	D [mm]	d_s [mm]	[EUR/pcs]
200818	PGS-20/H4L	M 20	Customer specification	30	35	10	on request
200819	PGS-24/H4L	M 24	Customer specification	36	40	12	on request
200820	PGS-30/H4L	M 30	Customer specification	45	50	16	on request
200821	PGS-36/H4L	M 36	Customer specification	54	60	20	on request
442419	PGS-39/H4L	M 39	Customer specification	59	65	20	on request
200822	PGS-42/H4L	M 42	Customer specification	63	70	25	on request
200823	PGS-48/H4L	M 48	Customer specification	72	80	25	on request
200824	PGS-56/H4L	M 56	Customer specification	84	90	28	on request

CE

PGS/H2 Foundation Anchor bent

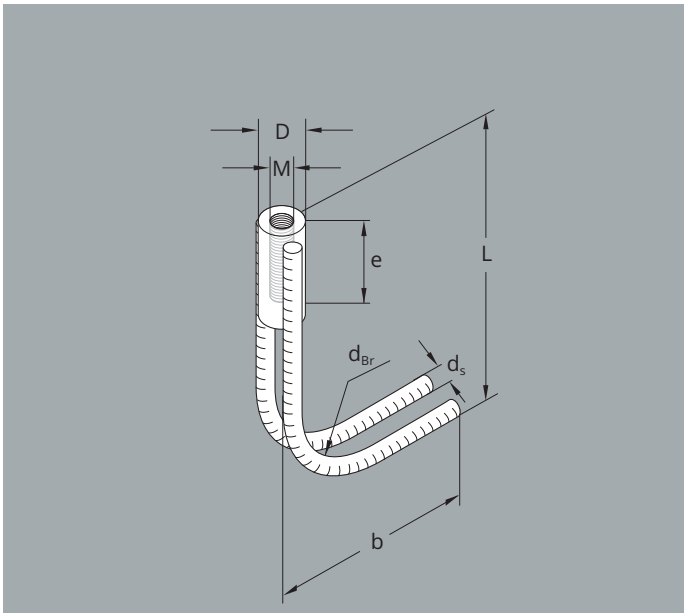

PGS/H2-B1 one-sided bent

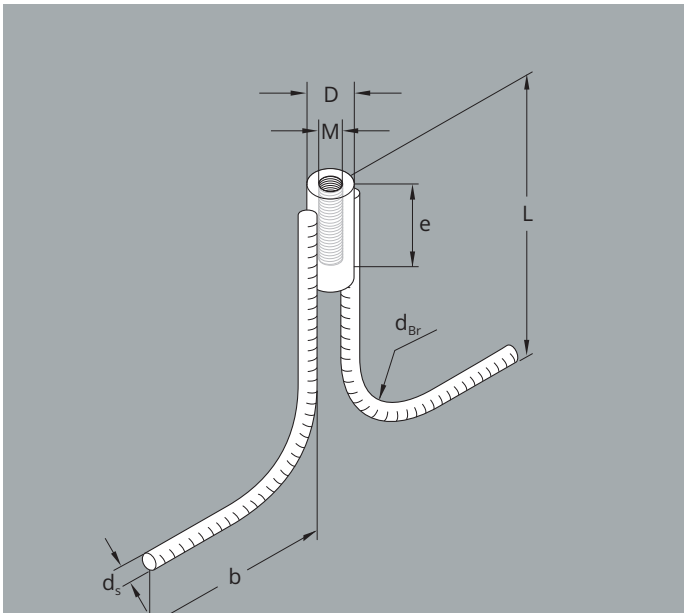

PGS/H2-B2 one-sided bent

PGS/H2-B1 Foundation Anchor bent on one side – black steel

Ref. no.	Type	Thread size	Dimensions							Price plus RTZ
			L_{min} [mm]	b_{min} [mm]	e [mm]	D [mm]	d_s [mm]	d_{Br} [mm]	L/b/d_{Br} [mm]	[EUR/pcs]
020262	PGS-16/H2-B1	M 16	140	110	24	25	10	100	Customer specification	on request
020263	PGS-20/H2-B1	M 20	159	132	30	30	12	120	Customer specification	on request
020264	PGS-24/H2-B1	M 24	192	176	36	40	16	160	Customer specification	on request
020265	PGS-30/H2-B1	M 30	285	275	45	50	25	250	Customer specification	on request
020266	PGS-36/H2-B1	M 36	321	308	54	60	28	280	Customer specification	on request
020444	PGS-39/H2-B1	M 39	321	308	59	65	28	280	Customer specification	on request
020267	PGS-42/H2-B1	M 42	364	352	63	70	32	320	Customer specification	on request
020268	PGS-48/H2-B1	M 48	450	440	72	80	40	400	Customer specification	on request
020269	PGS-56/H2-B1	M 56	450	440	84	90	40	400	Customer specification	on request

CE

PGS/H2-B2 Foundation Anchor bent on both sides – black steel

Ref. no.	Type	Thread size	Dimensions							Price plus RTZ
			L_{min} [mm]	b_{min} [mm]	e [mm]	D [mm]	d_s [mm]	d_{Br} [mm]	L/b/d_{Br} [mm]	[EUR/pcs]
020254	PGS-16/H2-B2	M 16	140	110	24	25	10	100	Customer specification	on request
020255	PGS-20/H2-B2	M 20	159	132	30	30	12	120	Customer specification	on request
020256	PGS-24/H2-B2	M 24	192	176	36	40	16	160	Customer specification	on request
020257	PGS-30/H2-B2	M 30	285	275	45	50	25	250	Customer specification	on request
020258	PGS-36/H2-B2	M 36	321	308	54	60	28	280	Customer specification	on request
020443	PGS-39/H2-B2	M 39	321	308	59	65	28	280	Customer specification	on request
020259	PGS-42/H2-B2	M 42	364	352	63	70	32	320	Customer specification	on request
020260	PGS-48/H2-B2	M 48	450	440	72	80	40	400	Customer specification	on request
020261	PGS-56/H2-B2	M 56	450	440	84	90	40	400	Customer specification	on request

CE

new

Foundation anchor sets with UP shim plate for PWC

Use

- Various foundation anchors in a set together with UP shim plates for the assembly of PWC wall shoes
- The wall is set down from above with the PWC wall shoe installed in the underside over the foundation anchor located in the foundation or the wall below. When doing this, the foundation anchor bolts / connecting bolts are guided through the opening in the underside of the wall shoe. The mounting plate can then be threaded over the bolts though the lateral assembly recess. Finally, a washer and a nut are screwed onto the bolt and the connection thus fixed.
- Sets each consisting of one of the selected foundation anchors, a UP shim plate and, in the case of PGS/H2, a PVB connecting bolt

Your advantages

- Complete set for formwork and building site assembly
- Eccentric hole in shim plate enables tolerances to be compensated

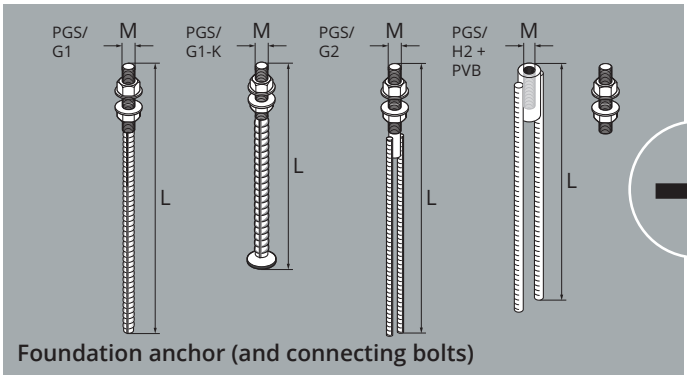

Foundation anchor (and connecting bolts)

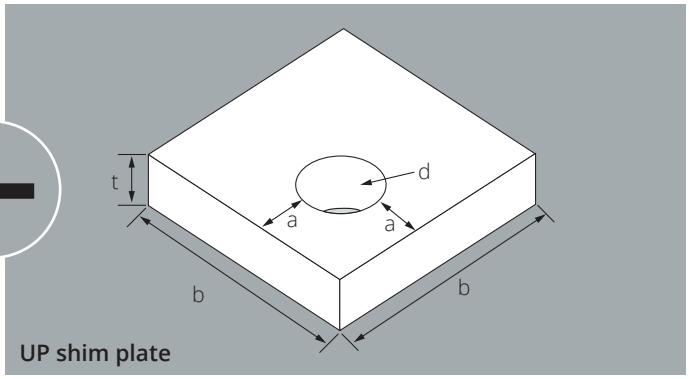

UP shim plate

PGS/G1 foundation anchor set – bright steel – for PWC wall shoe

Ref. no.	Type	for PWC-Type	Thread size	Dimensions					Set incl.	Packing unit	Weight approx.	Price plus RTZ
				L [mm]	b [mm]	a [mm]	t [mm]	d [mm]		[pieces]	[kg/pcs]	[EUR/pcs]
478849	**PGS-16/G1-790 Set**	PWC-16	M 16	790	60	25.0	12	18	1 x UP	1	1.69	**on request**
478850	**PGS-16/G1-127 Set**	PWC-16	M 16	1270	60	25.0	12	18	1 x UP	1	2.45	**on request**
478851	**PGS-20/G1-970 Set**	PWC-20	M 20	970	65	27.5	15	22	1 x UP	1	3.15	**on request**
478852	**PGS-20/G1-157 Set**	PWC-20	M 20	1570	65	27.5	15	22	1 x UP	1	4.63	**on request**
478853	**PGS-24/G1-111 Set**	PWC-24	M 24	1110	80	30.0	20	26	1 x UP	1	5.63	**on request**
478854	**PGS-24/G1-181 Set**	PWC-24	M 24	1810	80	30.0	20	26	1 x UP	1	8.33	**on request**
478855	**PGS-30/G1-136 Set**	PWC-30	M 30	1360	95	37.5	25	33	1 x UP	1	10.95	**on request**
478856	**PGS-30/G1-223 Set**	PWC-30	M 30	2230	95	37.5	25	33	1 x UP	1	16.44	**on request**
478857	**PGS-36/G1-174 Set**	PWC-36	M 36	1740	100	40.0	25	39	1 x UP	1	18.63	**on request**
478858	**PGS-36/G1-282 Set**	PWC-36	M 36	2020	100	40.0	25	39	1 x UP	1	28.69	**on request**
478859	**PGS-39/G1-171 Set**	PWC-39	M 39	1710	115	47.5	30	42	1 x UP	1	23.60	**on request**
478860	**PGS-39/G1-276 Set**	PWC-39	M 39	3330	115	47.5	30	42	1 x UP	1	36.60	**on request**

new

PGS/G1-K foundation anchor set - bright steel – for PWC wall shoe

Ref. no.	Type	for PWC-Type	Thread size	Dimensions					Set incl.	Packing unit	Weight approx.	Price plus RTZ
				L [mm]	b [mm]	a [mm]	t [mm]	d [mm]		[pieces]	[kg/pcs]	[EUR/pcs]
478861	**PGS-16/G1 Set**	PWC-16	M 16	280	60	25.0	12	18	1 x UP	1	1.04	**on request**
478862	**PGS-20/G1 Set**	PWC-20	M 20	350	65	27.5	15	22	1 x UP	1	1.65	**on request**
478863	**PGS-24/G1 Set**	PWC-24	M 24	430	80	30.0	20	26	1 x UP	1	3.12	**on request**
478864	**PGS-30/G1 Set**	PWC-30	M 30	550	95	37.5	25	33	1 x UP	1	5.90	**on request**
478865	**PGS-36/G1 Set**	PWC-36	M 36	700	100	40.0	25	39	1 x UP	1	8.63	**on request**
478866	**PGS-39/G1 Set**	PWC-39	M 39	750	115	47.5	30	42	1 x UP	1	10.57	**on request**

PGS/G2 foundation anchor set – bright steel – for PWC wall shoe

Ref. no.	Type	für PWC-Type	Thread size	Dimensions					Set inkl.	Packing unit	Weight approx.	Price plus RTZ
				L [mm]	b [mm]	a [mm]	t [mm]	d [mm]		[pieces]	[kg/pcs]	[EUR/pcs]
478873	**PGS-30/G2 Set**	PWC-30-HF	M 30	1025	95	37.5	25	33	1 x UP	1	10.50	**on request**
478874	**PGS-39/G2 Set**	PWC-36-HF	M 36	1310	110	45.0	30	39	1 x UP-HF	1	17.37	**on request**

PGS/H2 foundation anchor set – bright steel – for PWC wall shoe

Ref. no.	Type	for PWC-Type	Thread size	Dimensions					Set incl.	Packing unit	Weight approx.	Price plus RTZ
				L [mm]	b [mm]	a [mm]	t [mm]	d [mm]		[pieces]	[kg/pcs]	[EUR/pcs]
478867	**PGS-16/H1 Set**	PWC-16	M 16	510	60	25.0	12	18	1 x UP	1	1.55	**on request**
478868	**PGS-20/H1 Set**	PWC-20	M 20	600	65	27.5	15	22	1 x UP	1	2.41	**on request**
478869	**PGS-24/H1 Set**	PWC-24	M 24	645	80	30.0	20	26	1 x UP	1	4.55	**on request**
478870	**PGS-30/H1 Set**	PWC-30/-HF	M 30	880	95	37.5	25	33	1 x UP	1	11.55	**on request**
478871	**PGS-36/H1 Set**	PWC-36/-HF	M 36	1135	110	45.0	30	39	1 x UP-HF	1	18.71	**on request**
478872	**PGS-39/H1 Set**	PWC-39	M 39	1345	115	47.5	30	42	1 x UP	1	26.69	**on request**

PH-MU Female Bar

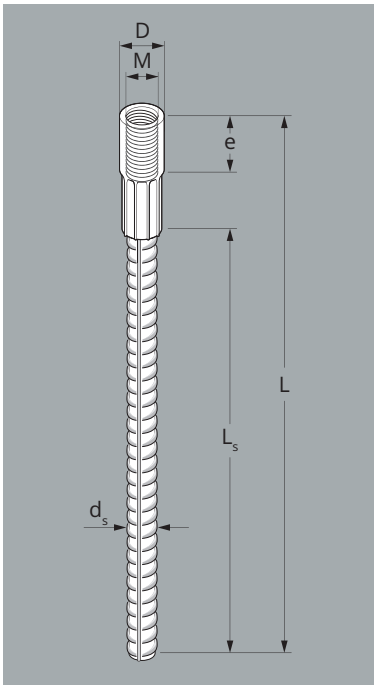

Use

- Anchor with a straight bar for anchoring static loads in the concrete base
- Transfer of loads into the component via bond through an end anchorage or overlapping joint according to standard
- Use in combination with column shoes or wall shoes and Connect bolts
- Female bar and column shoe/wall shoe each concreted into one component. Can be bolted together for connection via a separate Connect bolt. Recesses are then cast

Your advantages

- No obtrusive threaded bolts protruding from the structural element
- Permits thinner foundations
- Simple screw connection with column shoe/wall shoe via Connect bolt
- Rigid load-bearing connection
- Complete system for the transmission of tensile and transversal shear forces

Component recommendation

✓ Column ☑ Foundation ✓ Precast wall

Muffenstab PH-MU – black steel

Ref. no.	Type	Thread size	Dimensions					Load carrier	Packing unit	Weight approx.	Price plus RTZ
			L [mm]	L_s [mm]	e [mm]	D [mm]	d_s [mm]	[pieces]	[pieces]	[kg/pcs]	[EUR/pcs]
119057	**PH-MU-12/570**	M 16	570	520	20	22.3	12	200	1	0.57	**7.25**
119058	**PH-MU-12/800**	M 16	800	750	20	22.3	12	300	1	0.78	**8.20**
119059	**PH-MU-12/1500**	M 16	1500	1450	20	22.3	12	200	1	1.40	**12.40**
119067	**PH-MU-16/1020**	M 20	1020	955	24	28.8	16	200	1	1.78	**11.55**
119069	**PH-MU-16/1440**	M 20	1440	1375	24	28.8	16	200	1	2.43	**13.30**
119070	**PH-MU-16/2000**	M 20	2000	1935	24	28.8	16	50	1	3.30	**18.95**
119073	**PH-MU-20/1280**	M 24	1280	1195	32	35.3	20	200	1	3.45	**16.45**
119075	**PH-MU-20/1800**	M 24	1800	1715	32	35.3	20	125	1	4.73	**20.10**
119076	**PH-MU-20/3000**	M 24	3000	2915	32	35.3	20	50	1	7.69	**31.00**
119081	**PH-MU-25/1600**	M 30	1600	1497	40	44.1	25	150	1	6.70	**26.25**
119082	**PH-MU-25/2260**	M 30	2260	2157	40	44.1	25	50	1	9.24	**31.90**
119083	**PH-MU-25/3600**	M 30	3600	3497	40	44.1	25	35	1	14.50	**48.70**
119088	**PH-MU-28/1790**	M 36	1790	1666	42	51.0	28	100	1	9.47	**34.10**
119089	**PH-MU-28/2530**	M 36	2530	2406	42	51.0	28	50	1	13.05	**43.30**
119090	**PH-MU-28/3600**	M 36	3600	3476	42	51.0	28	50	1	18.22	**61.70**

PVB/PGV Connect Bolt

Use

- For Connect column shoes and foundation anchors, type H/female bar
- Bolt can be screwed into the foundation anchor/female bar shortly before installation. The column shoe can then be positioned on it and screwed tight.
- Nuts and washers allow height adjustment and alignment and er load

Your advantages

- No obtrusive threaded bolts protruding from the structural element
- Simple screw connection with column shoe via Connect bolt
- Subsequent adjustment and er load possible with the aid of nuts
- Rigid load-bearing connection
- High strength material
- Type-approved

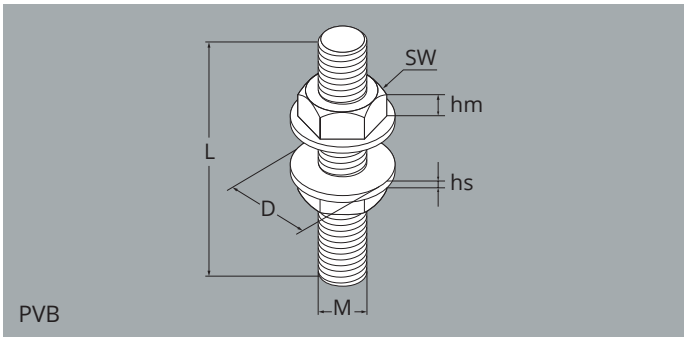

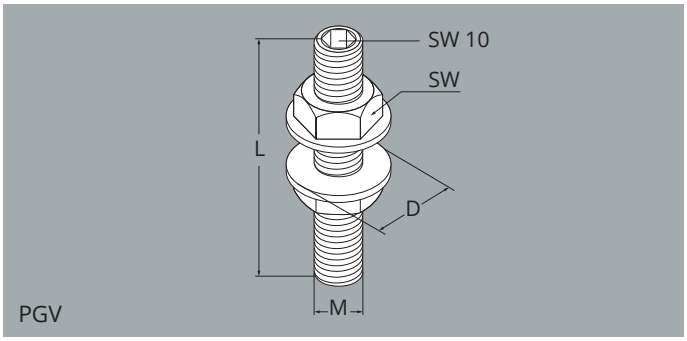

PVB Connect Bolt – black steel

Ref. no.	Type	Thread size	Dimensions			Load carrier	Packing unit	Weight approx.	Price plus RTZ
			L [mm]	SW [mm]	D [mm]	[pieces]	[pieces]	[kg/100 pcs]	[EUR/pcs]
203111	**PVB-16**	M 16	130	24	45	100	1	25.00	**7.75**
203112	**PVB-20**	M 20	145	30	45	100	1	56.00	**9.10**
203113	**PVB-24**	M 24	160	36	55	100	1	93.00	**12.85**
203114	**PVB-30**	M 30	195	46	65	100	1	175.00	**18.20**
203115	**PVB-36**	M 36	230	55	75	100	1	284.00	**27.45**
445445	**PVB-39**	M 39	240	60	75	100	1	820.40	**32.20**

CE

PGV Connect Bolt – black steel

Ref. no.	Type	Thread size	Dimensions			Load carrier	Packing unit	Weight approx.	Price plus RTZ
			L [mm]	SW [mm]	D [mm]	[pieces]	[pieces]	[kg/100 pcs]	[EUR/pcs]
159040	**PGV-42**	M 42	240	65	78	–	1	390.00	**37.70**
159041	**PGV-48**	M 48	270	75	92	–	1	560.00	**52.00**
159042	**PGV-56**	M 56	300	85	105	–	1	870.00	**80.00**

CE

PAP Connect Bolt

Use

- For Connect wall shoes and foundation anchors, type H
- Bolt can be screwed into the foundation anchor. The wall shoe can then be positioned on it and screwed tight.

Your advantages

- Simple screw connection with wall shoe via Connect bolt
- High strength material
- Complete system for the transmission of tensile and transversal shear forces
- Shorter construction times and thus lower costs
- Tolerances up to 40 mm in longitudinal direction
- Type-approved

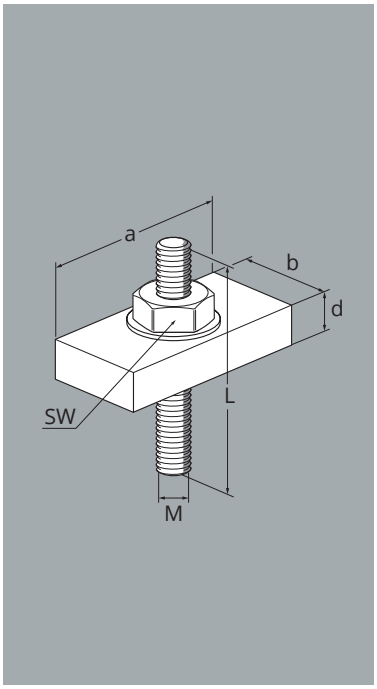

PAP Connect Bolt – black steel

Ref. no.	Type	Thread size	Dimensions					Packing unit	Weight approx.	Price plus RTZ
			L [mm]	SW [mm]	a [mm]	b [mm]	d [mm]	[pieces]	[kg/pcs]	[EUR/pcs]
199401	**PAP-16**	M 16	180	24	100	50	20	1	1.10	**23.40**
199402	**PAP-20**	M 20	200	30	100	60	25	1	1.70	**28.30**
199403	**PAP-24**	M 24	220	36	100	70	25	1	2.20	**30.60**
199404	**PAP-30**	M 30	270	46	110	80	30	1	3.60	**38.80**
199405	**PAP-36**	M 36	320	55	130	100	35	1	6.40	**43.60**
199406	**PAP-42**	M 42	370	65	150	110	45	1	10.00	**86.80**
199407	**PAP-48**	M 48	410	75	150	130	45	1	13.10	**111.50**
199408	**PAP-56**	M 56	440	85	140	130	50	1	16.30	**138.50**

CE

PCC Positioning Socket

Use

- Mounting tool for use in combination with rubber and metal moulding inserts
- Fills the hole on the and erside of the column shoe exactly and tapers it to the diameter of a suitable fixing screw.
- Proper fixing and positioning of the column shoes on the formwork with the help of a separately available fixing screw

Your advantages

- Accuracy of fit – coordinated system components
- Clean and professional formwork fixing

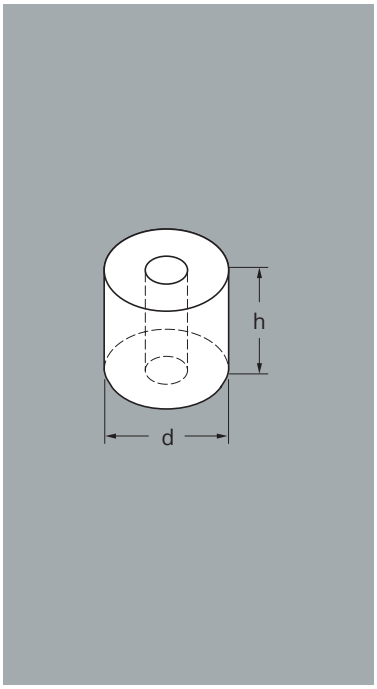

PCC Positioning Socket – galvanized socket – for PCC Column Shoe

Ref. no.	Type	Thread size	Dimensions		Packing unit	Weight approx.	Price plus RTZ
			d [mm]	h [mm]	[pieces]	[kg/100 pcs]	[EUR/pcs]
279424	**POS-16**	PCC-16	26	14	1	3.00	**14.25**
279425	**POS-20**	PCC-20	28	19	1	5.50	**16.45**
279426	**POS-24**	PCC-24	33	24	1	11.50	**17.30**
279427	**POS-30-1**	PCC-30-1	38	29	1	20.00	**19.75**
279428	**POS-30-2**	PCC-30-2	43	34	1	32.00	**22.80**
279429	**POS-36**	PCC-36	51	39	1	55.00	**25.55**
443016	**POS-39-1**	PCC-39-1	53	34	1	52.00	**26.40**
443017	**POS-39-2**	PCC-39-2	53	39	1	60.00	**28.05**

PCC Retaining Bush

Use

- Mounting tool for use in combination with polystyrene moulding inserts
- The head of the retaining bush fits exactly into the recess on the underside of the moulding insert and remains in position
- Professional fixing and positioning of the column shoes on the formwork with the help of the fixing screw. This can be screwed through the formwork into the internal thread of the retaining bush.

Your advantages

- Accuracy of fit – coordinated system components
- Clean and professional formwork fixing

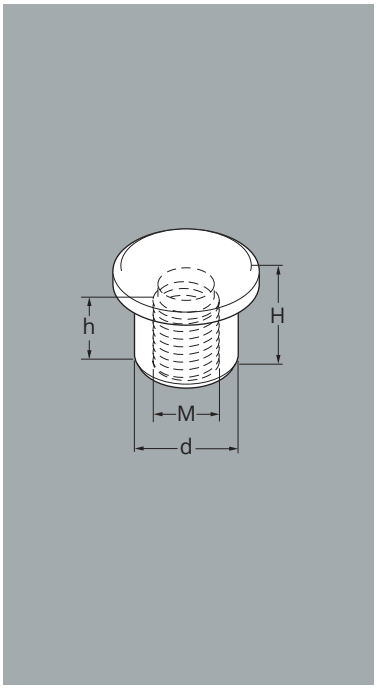

PCC Retaining Bush – galvanized steel – for PCC Column Shoe

Ref. no.	Type	For size	Thread size	Dimensions			Packing unit	Weight approx.	Price plus RTZ
				d [mm]	H [mm]	h [mm]	[pieces]	[kg/100 pcs]	[EUR/pcs]
275657	**HB-16**	PCC-16	M 10	26	20	14	1	8.90	**18.55**
275658	**HB-20**	PCC-20	M 10	28	25	19	1	13.50	**20.00**
275659	**HB-24**	PCC-24	M 10	33	30	24	1	22.00	**21.45**
275660	**HB-30-1**	PCC-30-1	M 16	38	35	29	1	31.00	**24.25**
275661	**HB-30-2**	PCC-30-2	M 16	43	40	34	1	45.00	**27.15**
275662	**HB-36**	PCC-36	M 16	51	45	39	1	73.00	**28.55**
443004	**HB-39-1**	PCC-39-1	M 16	53	42	34	1	78.00	**31.70**
443005	**HB-39-2**	PCC-39-2	M 16	53	47	39	1	87.00	**36.00**

Fixing screw for screw connection system

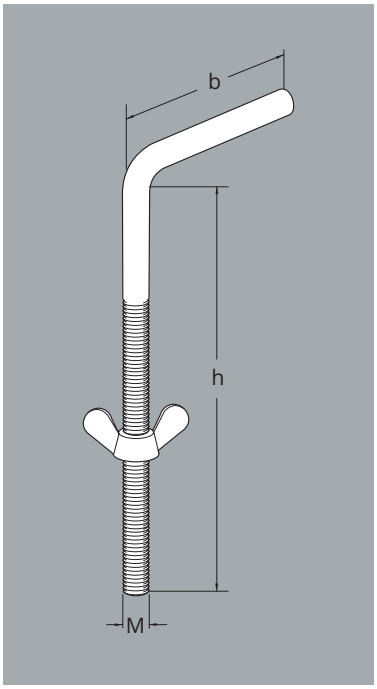

Use

- Connection of column shoes with retaining bush or positioning socket through the formwork

Your advantages

- Easy to screw by hand via L-shape and wing nut
- Suitable for different formwork thicknesses
- Reusable

Fixing Screw – galvanized steel – for PCC Retaining Bush

Ref. no.	Type	For size	Thread size	Dimensions		Packing unit	Weight approx.	Price plus RTZ
				h [mm]	b [mm]	[pieces]	[kg/100 pcs]	[EUR/pcs]
118544	**FIX-10**	PCC-16–24	M 10	150	60	1	12.62	**6.40**
118547	**FIX-16**	PCC-30–39	M 16	180	60	1	46.00	**12.75**

Moulding Insert, corner installation

Use

- For the professional execution of the necessary screw opening of PCC Column Shoes
- Special moulding inserts are added before concreting to secure the formwork in order to prevent the column shoe from being filled with concrete. After stripping of the formwork, the moulding inserts are removed, leaving precisely fitting screw opening. This is cast after assembly

Your advantages

- Easy production of a threaded opening
- Different versions – different lifetimes
- Accuracy of fit – coordinated system components
- Clean and professional formwork fixing

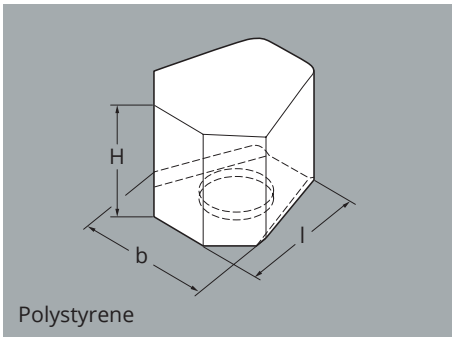

Polystyrene

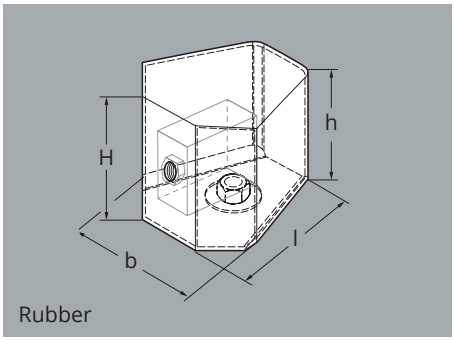

Rubber

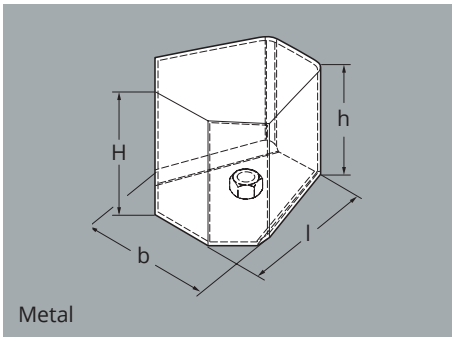

Metal

Moulding insert. corner installation – polystyrene – for PCC Column Shoe

Ref. no.	Type	For size	Dimensions ca.			Packing unit	Weight approx.	Price plus RTZ
			H [mm]	l [mm]	b [mm]	[pieces]	[kg/100 pcs]	[EUR/pcs]
278934	AKE-S-16	PCC-16	75.0	88.0	89.0	1	1.0	**1.02**
278935	AKE-S-20	PCC-20	85.0	93.0	97.0	1	1.0	**1.02**
278936	AKE-S-24	PCC-24	95.0	98.0	100.0	1	1.0	**1.02**
278937	AKE-S-30-1	PCC-30-1	105.0	111.0	119.0	1	1.0	**1.54**
278938	AKE-S-30-2	PCC-30-2	105.0	119.0	119.0	1	1.0	**1.54**
278939	AKE-S-36	PCC-36	125.0	117.0	132.0	1	1.0	**2.11**
442816	AKE-S-39-1	PCC-39-1	130.0	123.0	136.0	1	1.0	**2.81**
442817	AKE-S-39-2	PCC-39-2	135.0	122.0	132.0	1	1.0	**2.81**

Moulding insert. corner installation – rubber – for PCC Column Shoe

Ref. no.	Type	For size	Thread size	Dimensions ca.				Packing unit	Weight approx.	Price plus RTZ
				H [mm]	h [mm]	l [mm]	b [mm]	[pieces]	[kg/100 pcs]	[EUR/pcs]
337908	AKE-G-16	PCC-16	M 16	75.0	67.3	88.0	89.0	1	28.0	**37.10**
337909	AKE-G-20	PCC-20	M 16	85.0	76.9	93.0	97.0	1	28.1	**38.30**
337910	AKE-G-24	PCC-24	M 16	95.0	87.4	98.0	100.0	1	31.0	**40.20**
337911	AKE-G-30-1	PCC-30-1	M 16	105.0	96.3	111.0	119.0	1	58.0	**47.20**
337912	AKE-G-30-2	PCC-30-2	M 16	105.0	95.6	119.0	119.0	1	62.0	**49.60**
337913	AKE-G-36	PCC-36	M 16	125.0	115.8	117.0	132.0	1	62.0	**50.80**
442822	AKE-G-39-1	PCC-39-1	M 16	130.0	120.0	123.0	136.0	1	70.0	**51.90**
442823	AKE-G-39-2	PCC-39-2	M 16	135.0	125.0	122.0	132.0	1	70.0	**54.00**

Moulding insert. corner installation – metal – for PCC Column Shoe

Ref. no.	Type	For size	Thread size	Dimensions ca.				Verp.-Einheit	Weight approx.	Price plus RTZ
				H [mm]	h [mm]	l [mm]	b [mm]	[pieces]	[kg/100 pcs]	[EUR/pcs]
325859	AKE-M-16	PCC-16	M 16	75.0	67.3	88.0	89.0	1	0.33	**107.00**
325860	AKE-M-20	PCC-20	M 16	85.0	76.9	93.0	97.0	1	0.40	**109.00**
325861	AKE-M-24	PCC-24	M 16	95.0	87.4	98.0	100.0	1	0.46	**111.00**
325862	AKE-M-30-1	PCC-30-1	M 16	105.0	96.3	111.0	119.0	1	0.61	**123.00**
325863	AKE-M-30-2	PCC-30-2	M 16	105.0	95.6	119.0	119.0	1	0.62	**125.00**
325864	AKE-M-36	PCC-36	M 16	125.0	115.8	117.0	132.0	1	0.76	**126.50**
442818	AKE-M-39-1	PCC-39-1	M 16	130.0	120.0	123.0	136.0	1	2.44	**137.00**
442819	AKE-M-39-2	PCC-39-2	M 16	135.0	125.0	122.0	132.0	1	2.47	**138.50**

Moulding Insert, side installation

Use

- For the professional execution of the necessary screw opening of PCC Column Shoes
- Special moulding inserts are added before concreting to secure the formwork in order to prevent the column shoe from being filled with concrete. After stripping of the formwork, the moulding inserts are removed, leaving precisely fitting screw opening. This is cast after assembly

Your advantages

- Easy production of a threaded opening
- Different versions – different lifetimes
- Accuracy of fit – coordinated system components
- Clean and professional formwork fixing

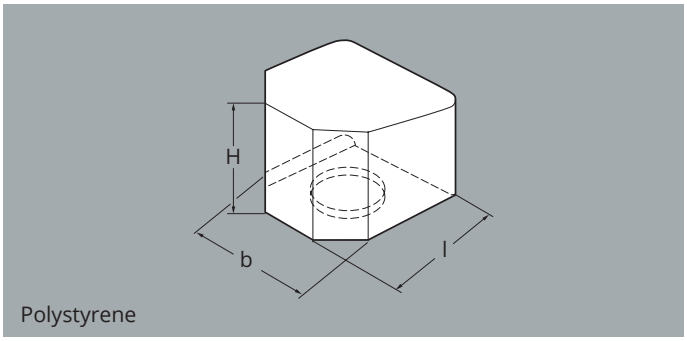

Polystyrene

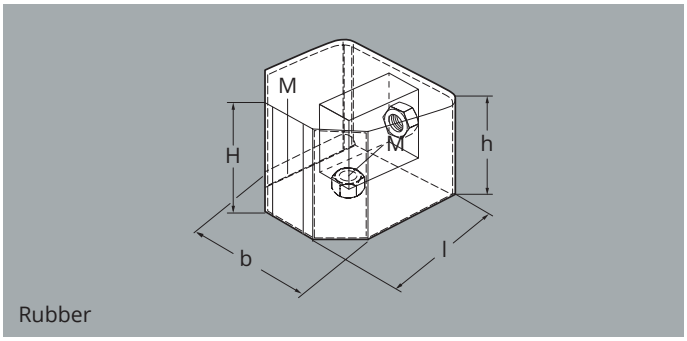

Rubber

Moulding insert. side installation – polystyrene – for PCC Column Shoe

Ref. no.	Type	For size	Dimensions ca. H [mm]	Dimensions ca. l [mm]	Dimensions ca. b [mm]	Packing unit [pieces]	Weight approx. [kg/100 pcs]	Price plus RTZ [EUR/pcs]
278982	AKS-S-16	PCC-16	75.0	90.0	106.0	1	1.0	**1.02**
278983	AKS-S-20	PCC-20	85.0	95.0	116.0	1	1.0	**1.02**
278984	AKS-S-24	PCC-24	95.0	100.0	120.0	1	1.0	**1.02**
278985	AKS-S-30-1	PCC-30-1	105.0	112.25	146.0	1	1.0	**1.54**
278986	AKS-S-30-2	PCC-30-2	105.0	121.0	146.0	1	1.0	**1.54**
278987	AKS-S-36	PCC-36	125.0	119.0	160.0	1	1.0	**2.11**
442831	AKS-S-39-1	PCC-39-1	130.0	123.0	163.0	1	1.0	**2.81**
442832	AKS-S-39-2	PCC-39-2	125.0	122.0	161.0	1	1.0	**2.81**

Moulding insert. side installation – rubber – for PCC Column Shoe

Ref. no.	Type	For size	Thread size	Dimensions ca. H [mm]	Dimensions ca. h [mm]	Dimensions ca. l [mm]	Dimensions ca. b [mm]	Packing unit [pieces]	Weight approx. [kg/100 pcs]	Price plus RTZ [EUR/pcs]
432551	AKS-G-16	PCC-16	M 16	75.0	103.5	90.0	106.0	1	28.0	**37.10**
432553	AKS-G-20	PCC-20	M 16	85.0	114.0	95.0	116.0	1	30.0	**38.30**
432554	AKS-G-24	PCC-24	M 16	95.0	117.5	100.0	120.0	1	31.0	**40.20**
432555	AKS-G-30-1	PCC-30-1	M 16	105.0	144.0	112.25	146.0	1	61.5	**47.20**
432556	AKS-G-30-2	PCC-30-2	M 16	105.0	142.5	121.0	146.0	1	60.0	**49.60**
432557	AKS-G-36	PCC-36	M 16	125.0	158.0	119.0	160.0	1	65.0	**50.80**
442824	AKS-G-39-1	PCC-39-1	M 16	130.0	120.0	123.0	163.0	1	70.0	**51.90**
442825	AKS-G-39-2	PCC-39-2	M 16	125.0	115.0	122.0	161.0	1	70.0	**54.00**

Thread protection plugs for foundation anchors

Use

- Flexible closure of foundation anchor with socket
- Plugs are simply pressed into the sockets of the anchors

Your advantages

- Protection of threads from dirt and damage
- Slot for easy removal of the plugs using screwdriver
- Economical

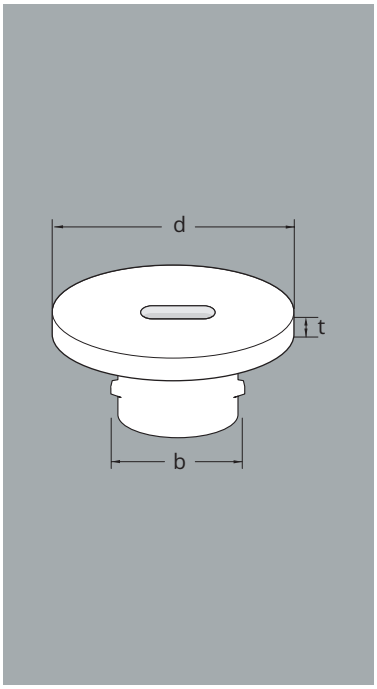

External Cap small for foundation anchor – plastic

Ref. no.	Type	For Thread size	Dimensions			Packing unit	Weight approx.	Price plus RTZ
			d [mm]	b [mm]	t [mm]	[pieces]	[kg/100 pcs]	[EUR/100 pcs]
118636	**ASK-16**	**M 16**	25.5	16	2.5	200	0.18	**11.90**
118642	**ASK-20**	**M 20**	31.5	20	3.0	200	0.29	**14.15**
118644	**ASK-24**	**M 24**	35.0	24	3.0	200	0.38	**15.90**
118647	**ASK-30**	**M 30**	44.0	30	3.5	200	0.59	**23.05**
118649	**ASK-36**	**M 36**	52.5	36	3.5	100	0.67	**24.40**
135313	**ASK-42**	**M 42**	59.5	42	4.0	100	0.99	**48.70**
137582	**ASK-56**	**M 56**	75.0	56	4.0	100	2.20	**261.50**

Cover Plate

Use

- For easy and clean filling of the assembly recess of PWS Wall Shoes
- Can be fixed to the Connect bolt with cable ties. The plate covers the entire assembly recess and facilitates pouring via a filling funnel

Your advantages

- Quick and easy filling of assembly recess
- Reusable

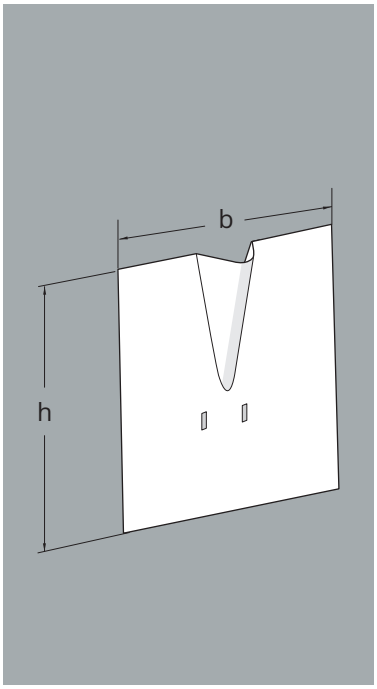

Cover Plate – galvanized steel – for PWS Wall Shoe

Ref. no.	Type	Dimensions			Packing unit	Weight approx.	Price plus RTZ
		h [mm]	b [mm]	Stärke [mm]	[pieces]	[kg/100 pcs]	[EUR/pcs]
165352	**ADB**	150	160	0.75	1	15.00	**6.70**

Component recommendations Screw connections

Connect element	Component				
	Precast wall	Girders	Foundation	Column	Joist
PCC Column Shoe		✓		✓	✓
PWS Wall Shoe	✓				
PGS/G1 Foundation Anchor	✓				
PGS/G2 Foundation Anchor			✓	✓	
PGS/G3 Foundation Anchor			✓	✓	
PGS/G1-K Foundation Anchor			✓	✓	
PGS/G1-DK Foundation Anchor			✓		
PGS/H2 Foundation Anchor			✓		
PGS/H4 Foundation Anchor	✓		✓	✓	
PH-MU Female Bar	✓		✓	✓	
Muffenstab PH-MU	✓		✓	✓	

Combination options – Screw connections

Foundation anchor/female bar	Column Shoe/ Wall Shoe		
	Column Shoe PCC	Wall Shoe PWS	Wall Shoe PWC
PGS/G1 Foundation Anchor	✓		✓[1)]
PGS/G2 Foundation Anchor	✓		✓[1)]
PGS/G3 Foundation Anchor	✓		
PGS/G1-K Foundation Anchor	✓		✓[1)]
PGS/G1-DK Foundation Anchor	✓		
PGS/H2 Foundation Anchor with PVB/PGV Connect Bolt	✓		✓[1)]
PGS/H4 Foundation Anchor with PVB/PGV Connect Bolt	✓		
PH-MU Female Bar, PVB/PGV Connect Bolt	✓		
PGS/H2 Foundation Anchor with PAP Connect Bolt		✓	
PGS/H4 Foundation Anchor with PAP Connect Bolt		✓	
PH-MU Female Bar, PAP Connect Bolt		✓	

[1)] In conjunction with PWC wall shoe as set with UP shim plate.

Combination options – Assembly accessories

Installation method		Fastener		
		Retaining bush HB 16 to 24 with fixing screw M 10	Retaining bush HB 30-1 to 39-2 with fixing screw M 16	Positioning socket POH 16 to 39-2 with fixing screw M 16
Corner installation	Moulding insert, corner, polystyrene	✓	✓	
	Moulding insert, corner, rubber			✓
	Moulding insert, corner, metal			✓
Side installation	Moulding insert, corner, polystyrene	✓	✓	
	Moulding insert, side, rubber			✓

Bearings

Steel Bearing p. 238

Steel Bearings make it easier to assemble TT ceilings, beams or trough plates, since there is no need for complex support measures during assembly. The in-stock are installed in the front sides of the ceiling constructions and bear both temporarily during assembly and permanently during use of the building. When assembled, the in stock absorbs all dead weight loads. Together with the inserted reinforcement and the in-situ concrete layer, the traffic loads are also safely transferred to the beams.

Stair in stock system p. 242

The stair in stock system consists of end and intermediate bearings. With the help of the in stock, loads from the stair elements are safely introduced into the house walls. The stairwell remains sound-decoupled from the living areas.

Steel Bearing

Steel Bearings facilitate the assembly of TT slabs, supporting beams or trough plates because there are no other forms of support during assembly. The bearings are installed in the front sides of the slab structures and bear both temporarily in their assembly state and permanently during building use. When assembled, the supports absorb all dead weight loads. Together with the inserted reinforcement and the in-situ concrete layer, live loads are also safely diverted into the ceiling joists.

Your advantages

- Bearing ledges and dowels for securing the position are no longer required
- Saves construction costs and time
- Prefabrication of the precast elements and er controlled conditions
- Significantly earlier use of building with shortest planning time

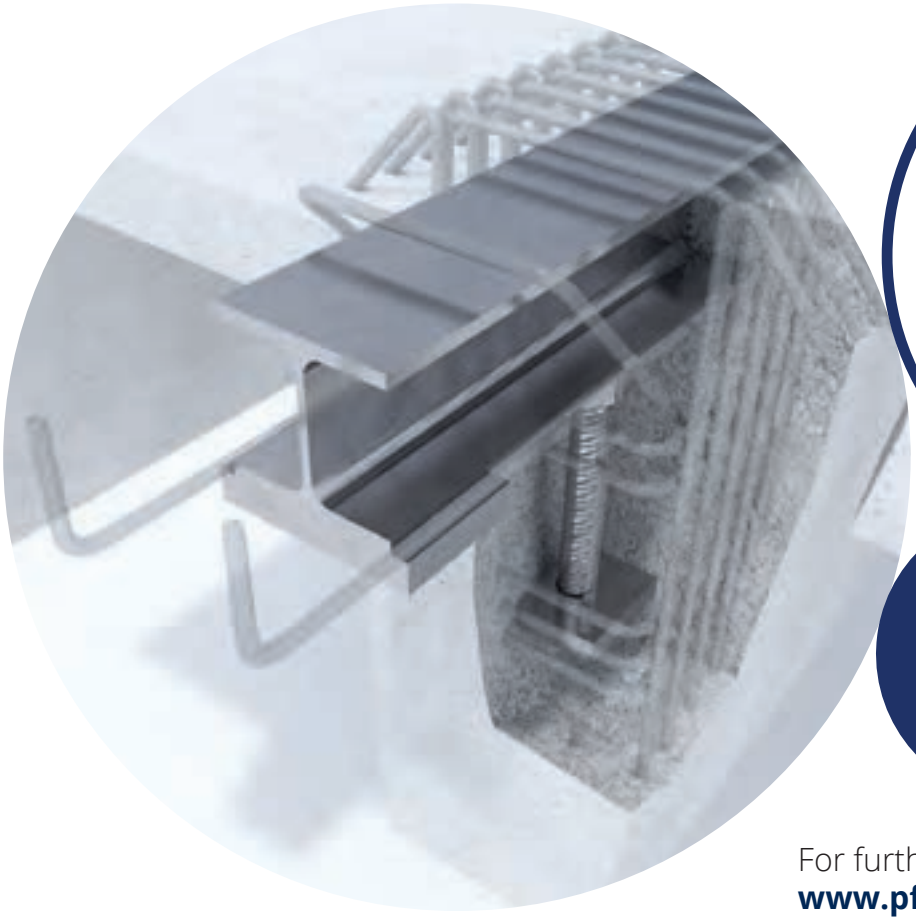

For further information, go to
www.pfeifer.info/steel-bearing

Steel Bearing

In stock

PS-A steel bearing, one-piece 240

Dimensioning software now download free of charge at:
www.pfeifer.info/ software-suite-cls

new

PS-A steel bearing, one-piece

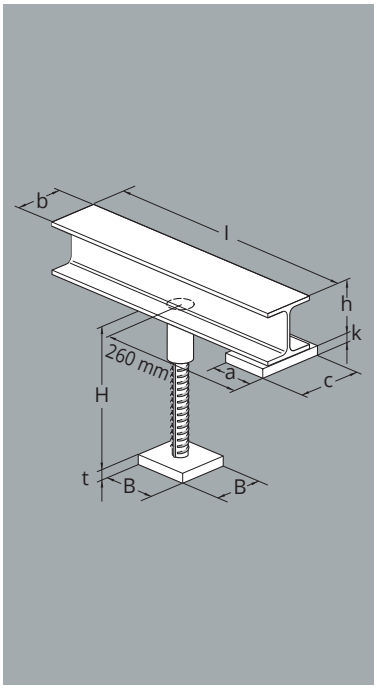

Use

- Installation of TT ceilings, joists or trough plates
- Installation on the front side in the slab construction
- Temporary support point in assembly state and permanent during use of the building
- Live loads are safely transferred to the joists with the inserted reinforcement and the in-situ concrete layer

Your advantages

- Secure bearing on simple rectangular joists
- Direct bearing with low load eccentricity
- Bearing ledges and dowels for securing the position are no longer required
- Saves construction costs and time
- Prefabrication of the precast elements under controlled conditions
- Significantly earlier use of building with shortest planning time
- Screeding work is no longer essential after concreting the topping slab
- Free dimensioning software
- one-piece – even shorter installation time!

Component recommendation

✓ TT slabs ✓ Trough plate ✓ Secondary joist

PS-A steel bearing, one-piece – bright steel

Ref. no.	Type	Dimensions									Packing unit	Weight approx.	Price plus RTZ
		H [mm]	l [mm]	b [mm]	h [mm]	k [mm]	a [mm]	c [mm]	t [mm]	B [mm]	[pieces]	[kg/pcs]	[EUR/pcs]
491874	**PS-A-65/225**	225	520	100	91	20	80	120	15	80	1	9.71	**66.60**
491879	**PS-A-65/250**	250	520	100	91	20	80	120	15	80	1	9.77	**66.60**
491881	**PS-A-65/275**	275	520	100	91	20	80	120	15	80	1	9.83	**66.60**
491882	**PS-A-65/300**	300	520	100	91	20	80	120	15	80	1	9.89	**66.60**
491883	**PS-A-65/325**	325	520	100	91	20	80	120	15	80	1	9.95	**66.60**
491884	**PS-A-65/350**	350	520	100	91	20	80	120	15	80	1	10.02	**66.60**
491885	**PS-A-65/375**	375	520	100	91	20	80	120	15	80	1	10.08	**66.60**
491886	**PS-A-65/400**	400	520	100	91	20	80	120	15	80	1	10.14	**66.60**
468365	**PS-A-80-100/225**	225	520	100	96	20	80	120	20	90	1	13.01	**80.20**
468366	**PS-A-80-100/250**	250	520	100	96	20	80	120	20	90	1	13.11	**80.20**
468367	**PS-A-80-100/275**	275	520	100	96	20	80	120	20	90	1	13.20	**80.20**
468368	**PS-A-80-100/300**	300	520	100	96	20	80	120	20	90	1	13.30	**80.20**
468369	**PS-A-80-100/325**	325	520	100	96	20	80	120	20	90	1	13.40	**80.20**
468370	**PS-A-80-100/350**	350	520	100	96	20	80	120	20	90	1	13.49	**80.20**
468371	**PS-A-80-100/375**	375	520	100	96	20	80	120	20	90	1	13.59	**80.20**
468372	**PS-A-80-100/400**	400	520	100	96	20	80	120	20	90	1	13.69	**80.20**
468373	**PS-A-130/300**	300	520	100	100	20	80	120	20	100	1	16.07	**101.50**
468374	**PS-A-130/325**	325	520	100	100	20	80	120	20	100	1	16.19	**101.50**
468375	**PS-A-130/350**	350	520	100	100	20	80	120	20	100	1	16.31	**101.50**
468376	**PS-A-130/375**	375	520	100	100	20	80	120	20	100	1	16.43	**101.50**
468377	**PS-A-130/400**	400	520	100	100	20	80	120	20	100	1	16.55	**101.50**
468378	**PS-A-130/425**	425	520	100	100	20	80	120	20	100	1	16.67	**101.50**
468379	**PS-A-130/450**	450	520	100	100	20	80	120	20	100	1	16.79	**101.50**
468380	**PS-A-130/475**	475	520	100	100	20	80	120	20	100	1	16.91	**101.50**
468381	**PS-A-130/500**	500	520	100	100	20	80	120	20	100	1	17.03	**101.50**

new

PS-A steel bearing, one-piece – bright steel

Ref. no.	Type	Dimensions									Packing unit	Weight approx.	Price plus RTZ
		H [mm]	l [mm]	b [mm]	h [mm]	k [mm]	a [mm]	c [mm]	t [mm]	B [mm]	[pieces]	[kg/pcs]	[EUR/pcs]
468382	**PS-A-160/350**	350	720	120	120	20	80	150	20	100	1	25.30	**141.50**
468383	**PS-A-160/375**	375	720	120	120	20	80	150	20	100	1	25.43	**141.50**
468385	**PS-A-160/400**	400	720	120	120	20	80	150	20	100	1	25.55	**141.50**
468386	**PS-A-160/425**	425	720	120	120	20	80	150	20	100	1	25.67	**141.50**
468387	**PS-A-160/450**	450	720	120	120	20	80	150	20	100	1	25.79	**141.50**
468388	**PS-A-160/475**	475	720	120	120	20	80	150	20	100	1	25.91	**141.50**
468389	**PS-A-160/500**	500	720	120	120	20	80	150	20	100	1	26.03	**141.50**
468390	**PS-A-160/550**	550	720	120	120	20	80	150	20	100	1	26.27	**141.50**

Staircase bearing system

The staircase bearing system consists of end and intermediate supports. With the help of the bearings, loads from the stair elements are safely transferred into the house walls. The staircase remains sound-decoupled from the living areas.

Your advantages

- Good footstep sound isolation
- Stairs and er load are height-adjustable – usable without crane and braces
- Saves construction costs and time
- The sticking-on of neoprene bearings can be avoided

For further information, go to
www.pfeifer.info/staircase-bearing

Staircase bearing system

In stock

VarioSonic SLE staircase end bearing 244
VarioSonic SL intermediate staircase bearing . . . 245

VarioSonic SLE staircase end bearing

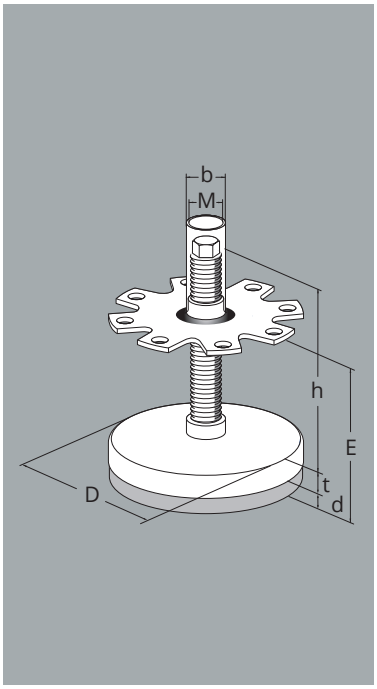

Use

- For supporting a concrete staircase on the slab or platform
- A bracket is formed on the stairs and on the slab for this purpose. A plastic tube is provided in the bracket of the staircase, into which the shaft of the staircase bearing is inserted. The bearing then rests on the slab bracket and transfers the vertical forces.

Your advantages

- Optimal sound decoupling between staircase and living areas
- Adjustable and er load without crane
- Higher tolerances through height adjustability
- Subsequent changes possible
- Variable in floor construction
- Adjustment range +/- 25mm
- Quick and uncomplicated installation in precast staircases
- Reduced crane times due to subsequent adjustability
- Type approval means planning safety
- Elastomeric bearings with building authority approval
- Fire resistance duration 90 min
- Increased requirements for footstep sound insulation are met

Component recommendation

✓ Straight stairs ✓ Angled stairs

VarioSonic SLC staircase end bearing – galvanized steel

Ref. no.	Type	Thread size	Dimensions						Plastic pipe Ø	Packing unit	Weight approx.	Price plus RTZ
			D [mm]	t [mm]	d [mm]	h [mm]	b [mm]	E [mm]	[mm]	[pieces]	[kg/100 pcs]	[EUR/pcs]
152930	**SLE**	M 16	100	18	10	120	20	40–100	200	1	84.00	**27.00**

CE

VarioSonic SL intermediate staircase bearing

Use

- For absorbing and transmitting the vertical forces from the tilting moment and the dead weight of concrete stairs into the staircase wall
- For this purpose, the staircase bearing is screwed into threaded anchors installed in the side of the elements

Your advantages

- Optimal sound decoupling between staircase and living areas
- Adjustable and er load without crane
- Change of the stair construction still possible even after many years. Saves construction costs and time
- The sticking-on of neoprene bearings can be avoided
- Different load levels for all common staircase dimensions
- Satisfies the prescribed fire resistance class duration R90 in dwellings
- No overhang when the stairs are swung in from above
- Joint widths up to 30 mm possible
- Galvanized anchor included

Component recommendation

✓ Straight stairs ✓ Angled stairs

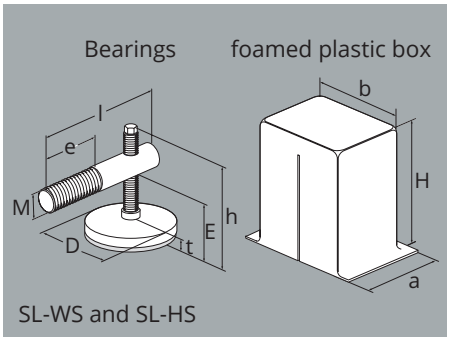

SL-WS and SL-HS

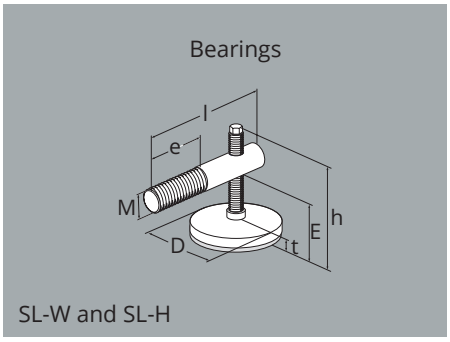

SL-W and SL-H

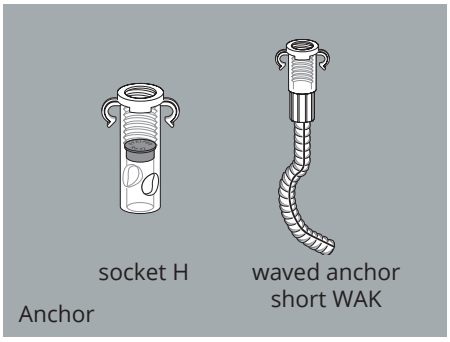

Anchor

VarioSonic SL intermediate staircase bearing – galvanized steel

Ref. no.	Type	incl. anchor	Thread size	Dimensions									Packing unit	Gewicht ca.	Price plus RTZ
				l [mm]	e [mm]	h [mm]	E [mm]	D [mm]	t [mm]	a [mm]	b [mm]	H [mm]	[pieces]	[kg/100 pcs]	[EUR/pcs]
152932	**SL-WS-150**	WAK	M 36	150	62	142.5	50–90	100	28	145	180	200	1	450.00	**74.00**
152931	**SL-HS-150**	H	M 36	150	62	142.5	50–90	100	28	145	180	200	1	320.00	**68.30**
152929	**SL-W-150**	WAK	M 36	150	62	142.5	50–90	100	28	–	–	–	1	382.00	**61.70**
152933	**SL-H-150**	H	M 36	150	62	142.5	50–90	100	28	–	–	–	1	248.00	**56.10**
166299	**SL-WS-170**	WAK	M 36	170	62	142.5	50–90	100	28	145	180	200	1	450.00	**79.30**
166300	**SL-HS-170**	H	M 36	170	62	142.5	50–90	100	28	145	180	200	1	320.00	**73.60**
166301	**SL-W-170**	WAK	M 36	170	62	142.5	50–90	100	28	–	–	–	1	420.00	**67.10**
166302	**SL-H-170**	H	M 36	170	62	142.5	50–90	100	28	–	–	–	1	280.00	**61.40**

CE

Footstep sound

Sound insulation elements p. 248

The sound insulation elements are installed around stairs and landings. The products offer optimum performance in footstep sound decoupling and fire prevention.

Sound insulation elements

The sound insulation elements are installed around stairs and landings. The products offer optimum performance in footstep sound decoupling and fire prevention.

Your advantages

- Footstep sound tests according to DIN 7396
- High fire resistance
- Products available for all-round footstep sound insulation

More information can be found at
https://pakonag.com

Sound insulation elements

Mandrels, boxes, plates, anchors and accessories

NL footstep sound plate 250
NF footstep sound plate 251
NB footstep sound plate 252
PD stair mandrel 253
D36 NT stair mandrel set. 254
Individual components of D36 stair mandrel 255
Schall-ISOBOX TSB®-T set 257
Schall-ISOBOX TSB®-BT set 258
Schall-ISOBOX TSB®-MB. 259
Schall-ISOBOX TSB®-F. 260
TSB®-BK/BWK reinforcement cages for Schall-ISOBOXES 261
Schall-ISODORN HQW® set 262
Schall-ISODORN HQW® ST. 263
REI 120 fire protection sleeve for Schall-ISODORN HQW® 264

new

NL footstep sound plate

Use

- Flexible insulating plate for acoustic separation of concrete components with a flush connection to the staircase wall.
- Attachment to concrete element by integrated adhesive strip
- Can be cut to size according to the case

Your advantages

- Self-adhesive on one side
- Also available as handy rolled goods
- Fire resistance class R120 according to DIN 4102-2
- Fire protection class B1 according to DIN 4102-1
- Fire protection class E according to EN 13501-1

Component recommendation

✓ Stair stringer (precast stairs) ✓ Staircase wall (cast-in-situ concrete stairs) ✓ Landing

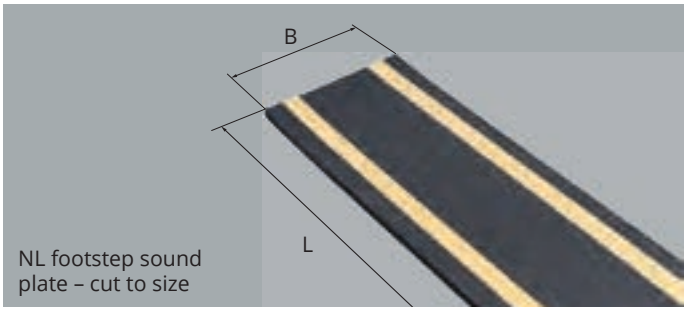

NL footstep sound plate – cut to size

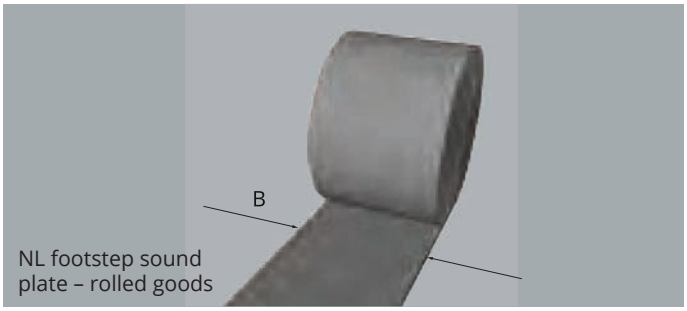

NL footstep sound plate – rolled goods

NF footstep sound plate – PE foam

pakon ag

Ref. no.	Execution	Ausführung	Dimensions			Load carrier	Packing unit	Weight approx.	Price plus RTZ
			L [mm]	B [mm]	Stärke [mm]	[pieces]	[pieces]	[kg/pcs]	[EUR/pcs]
486961	**NL 250/15/1000**	Zuschnitt	1000	250	15	450	25	0.13	**18.75**
486962	**NL 360/15/1000**	Zuschnitt	1000	360	15	300	25	0.17	**20.75**
486963	**NL 420/15/1000**	Zuschnitt	1000	420	15	200	25	0.26	**22.20**
486964	**NL 250/15/15000**	Rolle 15 m	15000	250	15	24	1	1.95	**281.00**
486965	**NL 360/15/15000**	Rolle 15 m	15000	360	15	16	1	2.55	**311.00**
486966	**NL 420/15/15000**	Rolle 15 m	15000	420	15	10	1	3.90	**333.00**

new

NF footstep sound plate

Use

- Insulating plate for acoustically decoupled support
- of precast stairs on landings and ceilings.
- Attachment to concrete element by integrated adhesive strip

Your advantages

- Absorbance of vertical and horizontal loads
- Self-adhesive on one side
- Footstep sound test according to DIN 7396
- Fire resistance class R120 according to DIN 4102-2
- Fire protection class B1 according to DIN 4102-1
- Fire protection class E according to EN 13501-1

Component recommendation

☑ Stairhead ☑ Landing with nib

NF footstep sound plate – PE foam with EPDM bearings

pakon ag

Ref. no.	Type	Quantity Stock	Dimensions L [mm]	Dimensions Breite[1] [mm]	Load carrier [pieces]	Packing unit [pieces]	Weight approx. [kg/pcs]	Price plus RTZ [EUR/pcs]
486967	**NF-V1-1000/410**	2	1000	410	200	25	0.23	**50.30**
486968	**NF-V1-1100/410**	2	1100	410	200	25	0.24	**50.30**
486969	**NF-V1-1200/410**	2	1200	410	200	25	0.25	**50.30**
486970	**NF-V1-1300/410**	2	1300	410	200	25	0.26	**60.00**
486971	**NF-V1-1500/410**	2	1500	410	200	25	0.30	**77.20**
486972	**NF-V2-1000/410**	3	1000	410	200	25	0.27	**86.20**
486973	**NF-V2-1100/410**	3	1100	410	200	25	0.28	**86.20**
486974	**NF-V2-1200/410**	3	1200	410	200	25	0.30	**86.20**
486975	**NF-V2-1300/410**	3	1300	410	200	25	0.33	**97.40**
486976	**NF-V2-1500/410**	3	1500	410	200	25	0.35	**115.50**

[1] Total width of plate straight, not angled

new

NB footstep sound plate

Use

- Insulating plate for acoustically decoupled support of precast stairs to base plates.

Your advantages

- Absorbance of vertical and horizontal loads
- Footstep sound test according to DIN 7396
- Fire resistance class R120 according to DIN 4102-2
- Fire protection class B1 according to DIN 4102-1
- Fire protection class E according to EN 13501-1

Component recommendation

✓ Stair base ✓ Base plate

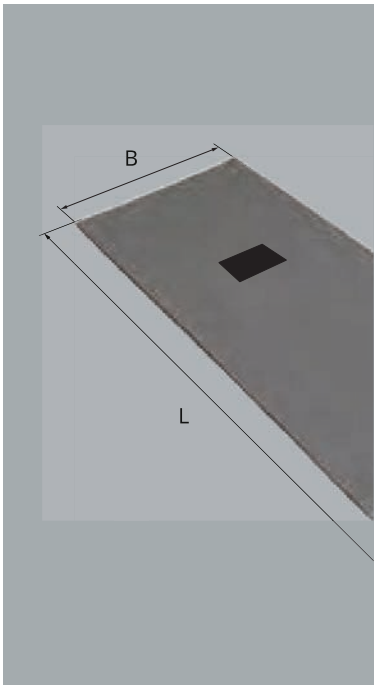

NB footstep sound plate – PE foam with EPDM bearings

pakon ag

Ref. no.	Type	Quantity Stock	Dimensions L [mm]	Dimensions B [mm]	Load carrier [pieces]	Packing unit [pieces]	Weight approx. [kg/pcs]	Price plus RTZ [EUR/pcs]
486977	NB-V1-1000/350	2	1000	350	200	25	0.23	88.60
486978	NB-V1-1100/350	2	1100	350	200	25	0.24	88.60
486979	NB-V1-1200/350	2	1200	350	200	25	0.25	88.60
486980	NB-V1-1300/350	2	1300	350	200	25	0.30	101.00
486981	NB-V1-1500/350	2	1500	350	200	25	0.40	114.00
486982	NB-V1-1000/600	2	1000	600	96	12	0.30	92.40
486983	NB-V1-1100/600	2	1100	600	96	12	0.33	92.40
486984	NB-V1-1200/600	2	1200	600	96	12	0.35	92.40
486985	NB-V1-1300/600	2	1300	600	96	12	0.37	103.50
486986	NB-V1-1500/600	2	1500	600	96	12	0.45	120.00
486987	NB-V2-1000/350	3	1000	350	200	25	0.27	130.50
486988	NB-V2-1100/350	3	1100	350	200	25	0.28	130.50
486989	NB-V2-1200/350	3	1200	350	200	25	0.30	130.50
486990	NB-V2-1300/350	3	1300	350	200	25	0.35	147.00
486991	NB-V2-1500/350	3	1500	350	200	25	0.45	164.50
486992	NB-V2-1000/600	3	1000	600	96	12	0.37	136.50
486993	NB-V2-1100/600	3	1100	600	96	12	0.38	136.50
486994	NB-V2-1200/600	3	1200	600	96	12	0.40	136.50
486995	NB-V2-1300/600	3	1300	600	96	12	0.45	153.00
486996	NB-V2-1500/600	3	1500	600	96	12	0.50	170.50

new

PD stair mandrel

Use

- Mandrel for the structural fixing of the position of concrete stairs.
- Usable with cast-in-situ concrete or precast element.

Your advantages

- Recess in the base plate for position fixing is not absolutely necessary
- EPDM sheath for damping footstep sound transmission

Component recommendation

✓ Stair base ✓ Base plate

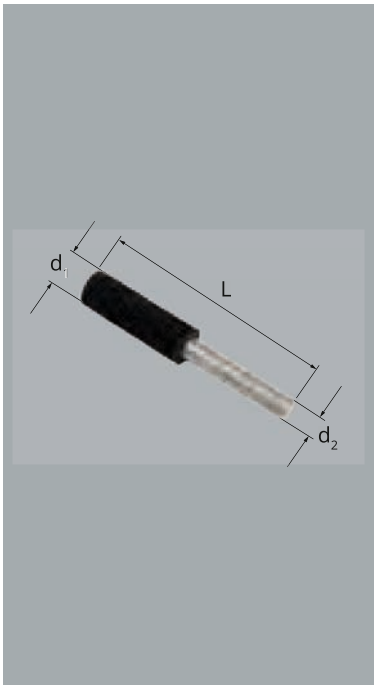

PD stair mandrel – galvanized steel mandrel with EPDM sheath

pakon ag

Ref. no.	Type	Dimensions			Weight approx.	Price plus RTZ
		d_1 [mm]	d_2 [mm]	L [mm]	[kg/pcs]	[EUR/pcs]
486939	PD-ZN-20	20	30	205	0.70	on request
486940	PD-ZN-30	30	50	355	2.23	on request

PD stair mandrel – stainless steel mandrel with EPDM sheath

pakon ag

Ref. no.	Type	Dimensions			Weight approx.	Price plus RTZ
		d_1 [mm]	d_2 [mm]	L [mm]	[kg/pcs]	[EUR/pcs]
486941	PD-VA-20	20	30	205	0.70	on request
486942	PD-VA-30	30	50	355	2.23	on request

RD sliding sleeve – for assembly of the PD stair mandrel – Plastic

pakon ag

Ref. no.	Type	für Treppendorn Type	Dimensions		Weight approx.	Price plus RTZ
			für Dorn d_1 [mm]	L [mm]	[kg/pcs]	[EUR/pcs]
486943	RD-20	PD 20	20	140	0.03	4.00
486944	RD-30	PD 30	30	220	0.05	on request

new

D36 NT stair mandrel set

Use

- D36 stair mandrel for supporting landings, as well as both straight and spiral cast-in-situ concrete or precast stairs
- The bearing is coated with a noise-attenuating material and thus reduces the footstep sound transmission.
- The faces of the steps are also damped via the sound plate.
- Due to the integrated fire protection sleeves, this connection can be assigned to fire resistance class REI120-RF1

Set consisting of:

- 2x D36-150 stair mandrels
- 2x allround anchors, short Rd36, incl. 2x data clip,
- 1x sound insulation plate for stairhead/stair base
- 2x integrated fire protection sleeves

Your advantages

- No elements protruding from the component when assembling stairs
- Thus, no individual construction sections are necessary per storey due to the stair assembly
- Saving of costs, as only 1 date is required for truck-mounted crane and 1 truck for the transport of the stairs1)
- Footstep sound test according to DIN 7396
- Fire resistance class REI120 according to DIN 4102-2 (due to fire protection sleeves)
- Fire behaviour group RF1 – no fire contribution according to BSV 2105 (due to fire protection sleeves)
- High shear force transmission
- Type tested

Component recommendation

✓ Stair base ✓ Stairhead

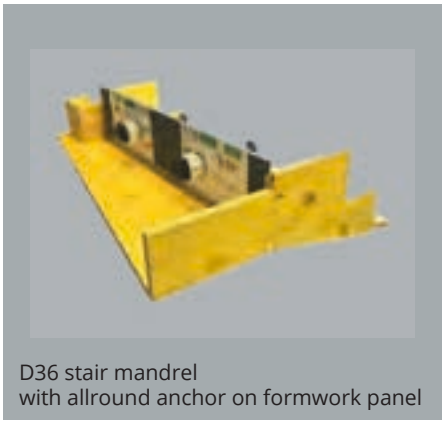
D36 stair mandrel
with allround anchor on formwork panel

D36 NT stair mandrel set –
in formwork on stair base[2)]

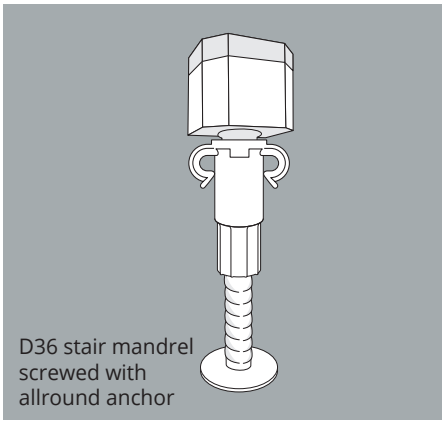
D36 stair mandrel
screwed with
allround anchor

D36 NT stair mandrel set – for stairhead and stair base

pakon ag

Ref. no.	Type	Sound insulation plate Dimensions			Load carrier	Packing unit	Weight approx.	Price plus RTZ
		Length [mm]	Width [mm]	Thickness [mm]	[pieces]	[pieces]	[kg/pcs]	[EUR/pcs]
486947	**D36-NT-1000/250**	1000	250	10	100	1	9.61	**250.50**
486948	**D36-NT-1090/250**	1090	250	10	100	1	9.94	**250.50**
486949	**D36-NT-1250/250**	1250	250	10	100	1	10.44	**250.50**

[1)] Dependent on the number of stair elements and their geometry. Analogously, delivery of stair elements may be possible on same day.
[2)] Formwork not included in set. Additional reinforcement needed in accordance with the manufacturer's specifications at www.pakonag.com

Individual components of D36 stair mandrel

new

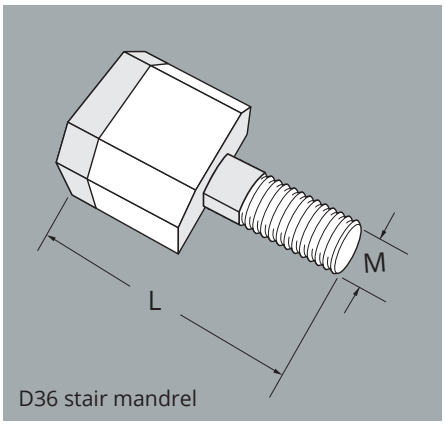

D36 stair mandrel

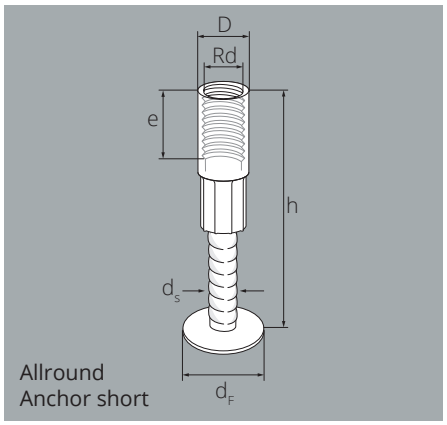

Allround Anchor short

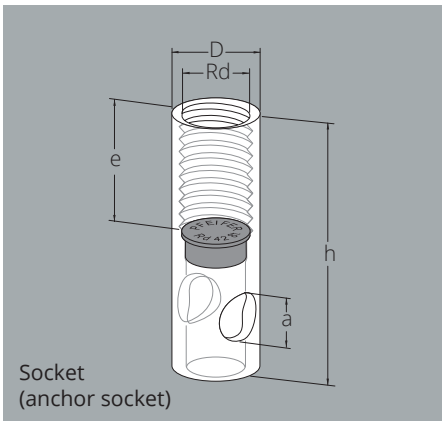

Socket (anchor socket)

D36 stair mandrel – hot-dip galvanized steel mandrel

pakon ag

Ref. no.	Type	Dimension L [mm]	Thread size	Load carrier [pieces]	Packing unit [pieces]	Weight approx. [kg/pcs]	Price plus RTZ [EUR/pcs]
486945	**D36-ZN-150**	150	M 36	200	1	1.60	**83.00**
486946	**D36-ZN-170**	170	M 36	200	1	1.70	**87.40**

Allround Anchor short – galvanized steel socket

Ref. no.	Type	Colour coding-Guideline data clip (see page 258)	Thread size	Dimensions D [mm]	d_F [mm]	d_s [mm]	e [mm]	h [mm]	Load carrier [pieces]	Packing unit [pieces]	Weight approx. [kg/100 pcs]	Price plus RTZ [EUR/pcs]
368797	**ARK-ZN-36**	Flame red	Rd 36	47.0	55	25	67	225	200	1	153.50	**15.10**

Socket – galvanized steel

Ref. no.	Type	Colour coding-Guideline data clip (see page 258)	Thread size	Dimensions D [mm]	a [mm]	e [mm]	h [mm]	Load carrier [pieces]	Packing unit [pieces]	Weight approx. [kg/100 pcs]	Price plus RTZ [EUR/pcs]
116924	**H-ZN-36**	Flame red	Rd 36	47.0	27.5	67	125	300	25	71.00	**13.30**

Standard: Allround Anchor short

Treppendorn mit Allround-Anchor kurz an Schalplatte

Alternative: Socket (anchor socket)

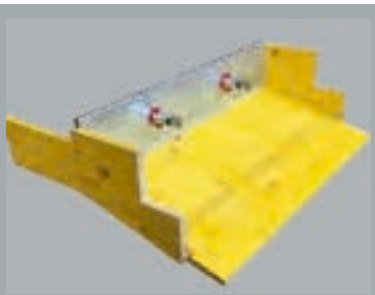
Stair mandrel with socket (anchor socket) on formwork panel

new

Individual components of D36 NT stair mandrel set

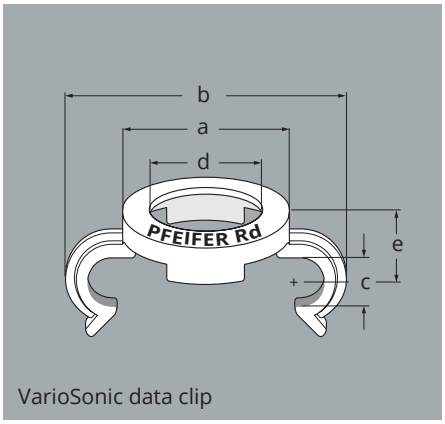

VarioSonic data clip

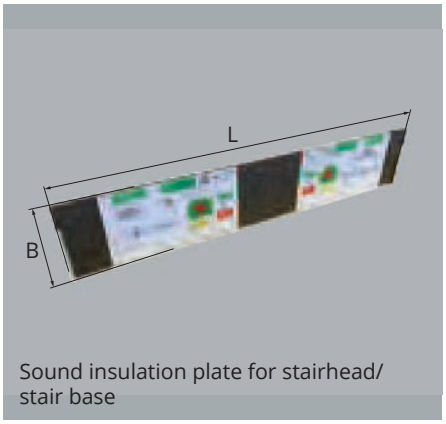

Sound insulation plate for stairhead/ stair base

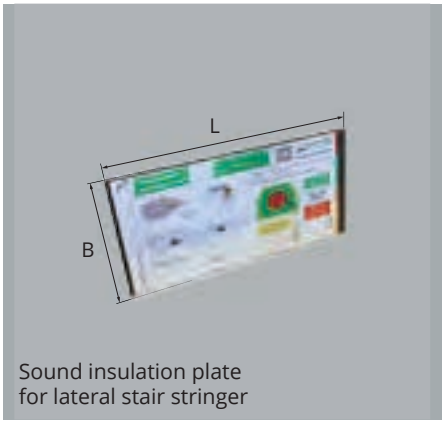

Sound insulation plate for lateral stair stringer

VarioSonic data clip – for marking the anchor and for fastening reinforcements – plastic

Ref. no.	Type	Colour coding	For anchor size	Dimensions					Packing unit	Weight approx.	Price plus RTZ
				a [mm]	b [mm]	c [mm]	d [mm]	e [mm]	[pieces]	[kg/100 pcs]	[EUR/100 pcs]
153542	**DC-VS-36**	Flame red	Rd 36	52.5	86	15.0	37.5	22.5	100	0.01	**101.00**

Sound insulation plate for stairhead/stair base – space for 2x D36

- 1x formwork panel with PE foam
- 2x BSM REI120[1)] mineral wool fire protection sleeve
- 2x plastic U-profiles for fastening

pakon ag

Ref. no.	Type	Dimensions			Load carrier	Packing unit	Weight approx.	Price plus RTZ
		L [mm]	B [mm]	Stärke [mm]	[pieces]	[pieces]	[kg/pcs]	[EUR/pcs]
486997	**SPK-D36-1250/250/10**	1250	250	10	100	1	0.34	**51.00**

[1)] If used correctly, fire resistance class REI120 can be attained with the help of this fire protection sleeve.

Sound insulation plate for lateral stair stringer – space for 1x D36

- 1x formwork panel with PE foam
- 1x BSM REI120[1)] mineral wool fire protection sleeve
- 1x plastic U-profiles for fastening

pakon ag

Ref. no.	Type	Dimensions			Load carrier	Packing unit	Weight approx.	Price plus RTZ
		L [mm]	B [mm]	Thickness [mm]	[pieces]	[pieces]	[kg/pcs]	[EUR/pcs]
020641	**SPW-D36-405/250**	405	250	Customer specification	100	1	0.15–0.20	**on request**

new

Schall-ISOBOX TSB®-T set

Use

- For footstep sound separation between stair landing and staircase wall.
- Use with cast-in-situ concrete or brickwork wall

Set consisting of:

- 1x recessing block incl. TSB®-MB assembly frame
- 1x TSB®-BK welded reinforcement cage

Your advantages

- Vibration-damping sound box
- Box including assembly frame
- Elaborate self-production of the reinforcement cage is not necessary
- Fire resistance class R120 attainable[1)]
- Footstep sound test according to DIN 7396
- Type tested

Component recommendation

✓ Landing ✓ Cast-in-situ concrete wall[2)] ✓ Masonry wall

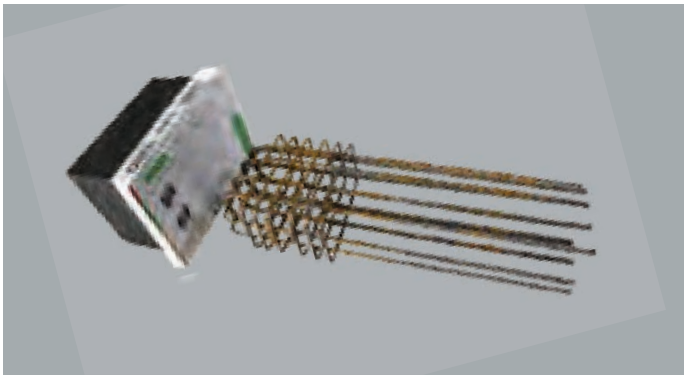

Schall-ISOBOX TSB®-T set – for cast-in-situ concrete and brickwork walls

pakon ag

Ref. no.	Type	Set components	Load carrier	Packing unit	Weight approx.	Price plus RTZ
			[pieces]	[pieces]	[kg/pcs]	[EUR/pcs]
486924	**TSB-T11**	TSB-MB11 + TSB-BK	50	1	9.10	**180.00**
486925	**TSB-T12**	TSB-MB12 + TSB-BK	50	1	9.25	**185.50**
486926	**TSB-T13**	TSB-MB13 + TSB-BK	50	1	9.45	**192.50**
486927	**TSB-T21**	TSB-MB21 + TSB-BK	50	1	9.30	**182.00**
486928	**TSB-T22**	TSB-MB22 + TSB-BK	50	1	9.45	**193.50**
486929	**TSB-T23**	TSB-MB23 + TSB-BK	50	1	9.65	**200.50**
020602	**TSB-T-Maxi-Tron**	for increased noise protection in accordance with manufacturer's specifications	50	1	on request	**on request**

[1)] Observe manufacturer's specifications at www.pakonag.com
[2)] Also for precast walls; often used for cast-in-situ concrete walls due to assembly frame.

new

Schall-ISOBOX TSB®-BT set

Use

- For footstep sound separation between stair landing and staircase wall.
- Use with precast or brickwork wall

Set consisting of:

- 1x TSB®-F recessing block
- 1x TSB®-BK welded reinforcement cage, concrete-lined

Your advantages

- Vibration-damping sound box
- Box, concrete-lined, with bearing reinforcement
- Elaborate self-production of the reinforcement cage is not necessary
- Ensures that enough concrete is in the box and compacted
- Fire resistance class R120 attainable1)
- Footstep sound test according to DIN 7396
- Type tested

Component recommendation

☑ Landing ☑ Precast wall ☑ Masonry wall

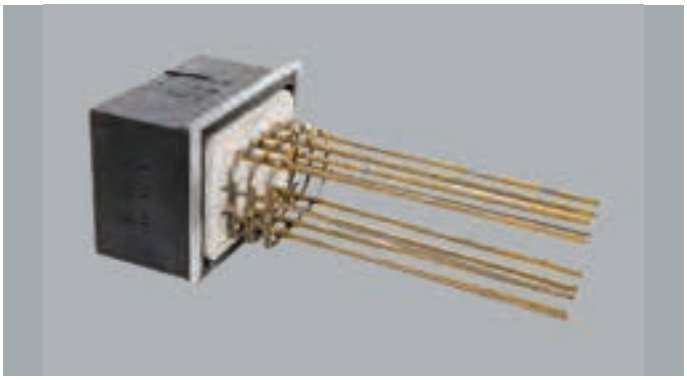

Schall-ISOBOX TSB®-BT set – for precast and brickwork walls

pakon ag

Ref. no.	Type	Set components	Load carrier [pieces]	Packing unit [pieces]	Weight approx. [kg/pcs]	Price plus RTZ [EUR/pcs]
486930	TSB-BT11	TSB-F11 + TSB-BWK	30	1	22.90	201.50
486931	TSB-BT13	TSB-F12 + TSB-BWK	30	1	23.05	208.50
486932	TSB-BT21	TSB-F13 + TSB-BWK	30	1	23.25	215.50
486933	TSB-BT22	TSB-F21 + TSB-BWK	30	1	24.50	219.50
486934	TSB-BT23	TSB-F22 + TSB-BWK	30	1	24.65	230.00
486935	TSB-BT23	TSB-F23 + TSB-BWK	30	1	25.85	239.00
020603	TSB-BT-Maxi-Tron	for increased noise protection in accordance with manufacturer's specifications	30	1	on request	on request

[1] Observe manufacturer's specifications at www.pakonag.com

new

Schall-ISOBOX TSB®-MB

Use

- For footstep sound separation between stair landing and staircase wall.
- Integrated frame for simple formwork mounting.
- Installation in recess in staircase wall.
- To be supplemented by TSB-BK or TSB-BWK reinforcement cages in the landing.

Your advantages

- Vibration-damping sound box
- Box including assembly frame
- Fire resistance class R120 attainable1)
- Footstep sound test according to DIN 7396
- Type tested

Component recommendation

✓ Cast-in-situ concrete wall[2)] ✓ Masonry wall

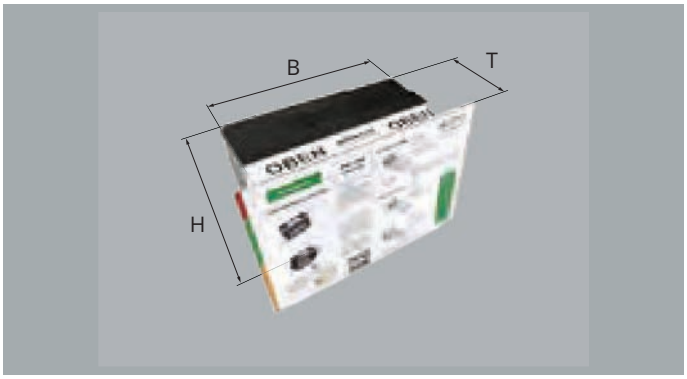

Schall-ISOBOX TSB®-MB – for cast-in-situ concrete and brickwork walls – rubber with metal frame

pakon ag

Ref. no.	Type	Stock	Dimensions			Load carrier	Packing unit	Weight approx.	Price plus RTZ
			B [mm]	T [mm]	H [mm]	[pieces]	[pieces]	[kg/pcs]	[EUR/pcs]
486918	**TSB-MB11**	bottom	245	150	180	117	1	1.55	**106.00**
486919	**TSB-MB12**	bottom and top	245	150	180	117	1	1.60	**111.50**
486920	**TSB-MB13**	bottom, top and sides	245	150	180	117	1	1.70	**118.50**
486921	**TSB-MB21**	bottom	245	150	200	117	1	1.65	**108.00**
486922	**TSB-MB22**	bottom and top	245	150	200	117	1	1.70	**119.00**
486923	**TSB-MB23**	bottom, top and sides	245	150	200	117	1	1.80	**126.50**
020601	**TSB-MB-Maxi-Tron**	for increased noise protection in accordance with manufacturer's specifications				117	1	on request	**on request**

[1)] Observe manufacturer's specifications at www.pakonag.com
[2)] Also for precast walls; often used for cast-in-situ concrete walls due to assembly frame.

new

Schall-ISOBOX TSB®-F

Use

- For footstep sound separation between stair landing and staircase wall.
- Installation in recess in staircase wall.
- To be supplemented by TSB-BK or TSB-BWK reinforcement cages in the landing.

Your advantages

- Vibration-damping sound box
- Fire resistance class R120 attainable[1)]
- Footstep sound test according to DIN 7396
- Type tested

Component recommendation

☑ Precast wall ☑ Masonry wall

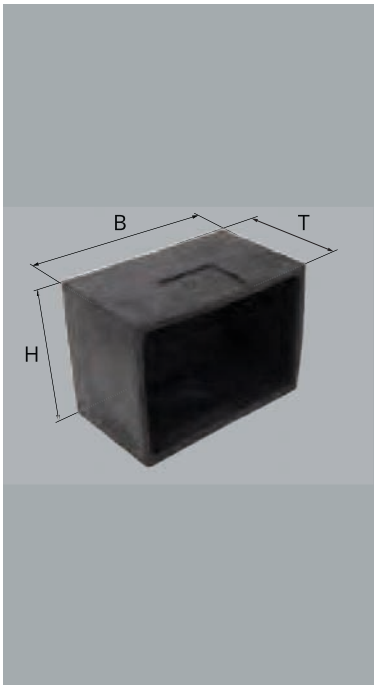

Schall-ISOBOX TSB®-F – for precast and brickwork walls – rubber

pakon ag

Ref. no.	Type	Lager	Dimensions B [mm]	Dimensions T [mm]	Dimensions H [mm]	Load carrier [pieces]	Packing unit [pieces]	Weight approx. [kg/pcs]	Price plus RTZ [EUR/pcs]
486912	**TSB-F11**	bottom	245	150	180	126	1	0.80	**93.60**
486913	**TSB-F12**	bottom and top	245	150	180	126	1	0.90	**100.50**
486914	**TSB-F13**	bottom, top and sides	245	150	180	126	1	1.20	**107.50**
486915	**TSB-F21**	bottom	245	150	200	117	1	1.00	**101.50**
486916	**TSB-F22**	bottom and top	245	150	200	117	1	1.10	**112.50**
486917	**TSB-F23**	bottom, top and sides	245	150	200	117	1	1.40	**121.50**
020600	**TSB-F-Maxi-Tron**	for increased noise protection in accordance with manufacturer's specifications				117	1	on request	**on request**

[1)] Observe manufacturer's specifications at www.pakonag.com

new

TSB®-BK/BWK reinforcement cages for Schall-ISOBOXES

Use

- Welded reinforcement cage to fit all footstep sound boxes, optionally also with concrete.

Your advantages

- Elaborate bending and welding of the required reinforcement cage unnecessary
- Stock keeping possible, saving of time in production
- Concrete variant: Ensures that enough concrete is in the box and compacted
- Fire resistance class R120 attainable[1)]

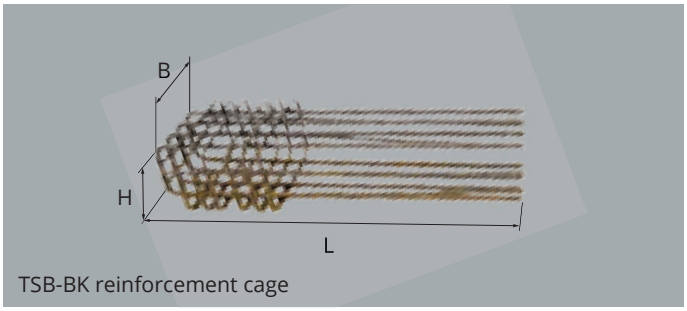

TSB-BK reinforcement cage

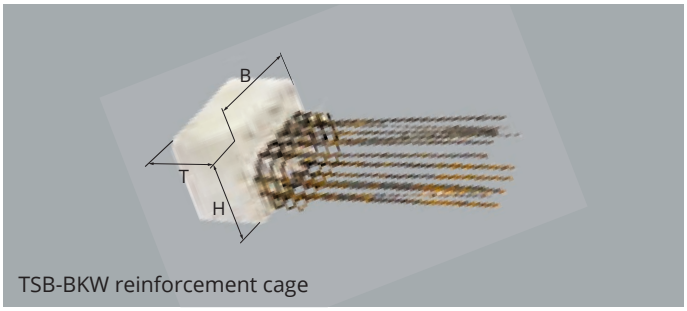

TSB-BKW reinforcement cage

TSB®-BK reinforcement cage – reinforcing steel

Ref. no.	Type	For TSB-F/MB type	Dimensions			Load carrier	Packing unit	Weight approx.	Price plus RTZ
			B [mm]	L [mm]	H [mm]	[pieces]	[pieces]	[kg/pcs]	[EUR/pcs]
486936	**TSB-BK**	11–13	205	586	120	50	1	4.60	**74.10**

TSB®-BWK reinforcement cage – reinforcing steel and concrete

Ref. no.	Type	For TSB-F/MB type	Dimensions			Load carrier	Packing unit	Weight approx.	Price plus RTZ
			B [mm]	T [mm]	H [mm]	[pieces]	[pieces]	[kg/pcs]	[EUR/pcs]
486937	**TSB-BWK 1**	11–13	245	150	180	30	1	21.60	**108.00**
486938	**TSB-BWK 2**	21–23	245	150	200	30	1	22.75	**118.00**

[1)] Observe manufacturer's specifications at www.pakonag.com

new

Schall-ISODORN HQW® set

Use

- For footstep sound/thermal decoupling of spiral stairs, landings, loggias and arcades.
- For use with different joint widths, manufactured to size. Please state joint width or mandrel length when ordering.
- Approval for internal and external components
- A fire resistance of REI120 can be attained when combined with optionally available fire protection sleeves.

Set consisting of:

- 1x support element/mandrel, 1x flight sleeve, 1x gantry reinforcement and 1x wall element/sound box

Your advantages

- Vibration-damping sound box
- Mandrel available in various material qualities, depending on corrosion protection requirements
- Footstep sound test according to DIN 7396
- European Technical Assessment (ETA)
- General technical approval

Component recommendation

✓ Spiral stairs ✓ Landing ✓ Loggia ✓ Arcade

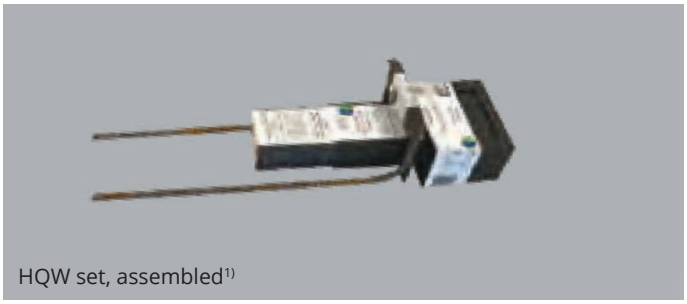

HQW set, assembled[1)]

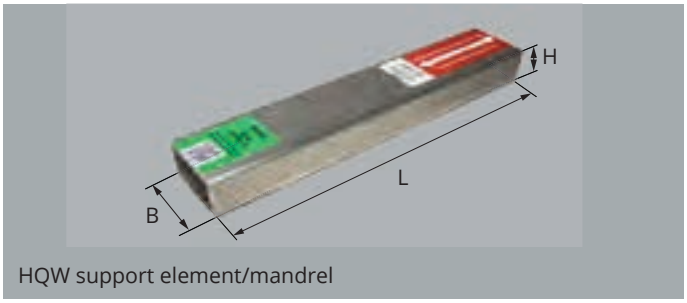

HQW support element/mandrel

Schall-ISODORN HQW® set

pakon ag

Ref. no.	Type HQW B/H/t-... t = mandrel thickness	Dimensions Joint width [mm]	Dimensions Mandrel length L [mm]	Material Mandrel	Load carrier [pieces]	Packing unit [pieces]	Weight approx. [kg/pcs]	Price plus RTZ [EUR/pcs]
486950	HQW 60/40/5-34-300	10	300	S355 zn	100	1	4.1	**110.00**
486951	HQW 60/40/5-34-310	20	310	S355 zn	100	1	4.1	**110.00**
486952	HQW 60/40/5-34-320	30	320	S355 zn	100	1	4.1	**110.00**
486953	HQW 60/40/5-34-330	40	330	S355 zn	100	1	4.2	**110.00**
486954	HQW 60/40/5-34-340	50	340	S355 zn	100	1	4.2	**110.00**
020604	HQW 60/40/5-34-...	60/80/100/120	350/370/390/410	S355 zn	100	1	on request	**on request**
020605	HQW 60/40/4-34-...	10/20/30/40/50/ 60/80/100/120	300/310/320/330/ 340/350/370/390/410	V2A	100	1	on request	**on request**
020606	HQW 60/40/4-34-...	10/20/30/40/50/ 60/80/100/120	300/310/320/330/ 340/350/370/390/410	V4A	100	1	on request	**on request**
486955	HQW 60/60/5-34-350	10	350	S355 zn	100	1	7.4	**171.50**
486956	HQW 60/60/5-34-360	20	360	S355 zn	100	1	7.4	**171.50**
486957	HQW 60/60/5-34-370	30	370	S355 zn	100	1	7.4	**171.50**
486958	HQW 60/60/5-34-380	40	380	S355 zn	100	1	7.4	**171.50**
486959	HQW 60/60/5-34-390	50	390	S355 zn	100	1	7.4	**171.50**
020607	HQW 60/60/5-34-...	60/80/100/120	400/420/440/460	S355 zn	100	1	on request	**on request**
020608	HQW 60/60/5-34-...	10/20/30/40/50/ 60/80/100/120	350/360/370/380/ 390/400/420/440/460	V2A	100	1	on request	**on request**
020609	HQW 60/60/5-34-...	10/20/30/40/50/ 60/80/100/120	350/360/370/380/ 390/400/420/440/460	V4A	100	1	on request	**on request**

[1)] Example HQW 60/40 set shown

new

Schall-ISODORN HQW® ST

Use

- For footstep sound/thermal decoupling of spiral stairs, landings, loggias and arcades.
- Height adjustment under load is possible.

Your advantages

- Compensation of assembly tolerances possible through height adjustability
- Footstep sound test according to DIN 7396

Component recommendation

☑ Spiral stairs ☑ Landing ☑ Loggia ☑ Arcade

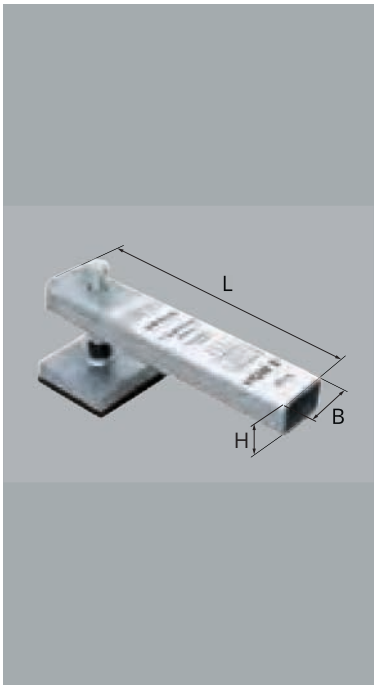

Schall-ISODORN HQW® ST – galvanized steel with EPDM bearing

pakon ag

Ref. no.	Type HQW B/H/t-... t = mandrel thickness	Dimensions Fugen-breite [mm]	L [mm]	Lager-stärke [mm]	Load carrier [pieces]	Packing unit [pieces]	Weight approx. [kg/pcs]	Price plus RTZ [EUR/pcs]
486960	HQW ST-60/40/4	20	310	10	100	1	4.2	on request

new

REI 120 fire protection sleeve for Schall-ISODORN HQW®

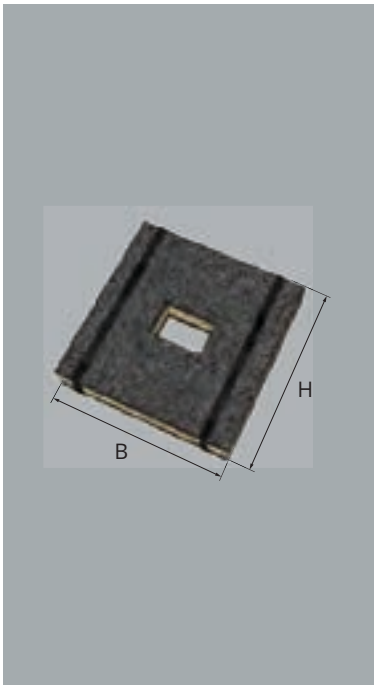

Use

- For fire protection and component connection by means of Schall-ISODORN HQW®.
- It is pulled over the mandrel and ordered in the desired joint width.

Your advantages

- Fire resistance class REI120 according to DIN 4102-2
- Fire behaviour group RF1 – no fire contribution according to BSV 2105
- Available for all common joint widths
- Joint widths up to 120 mm possible – cold staircase – thermal insulation

Component recommendation

✓ Spiral stairs ✓ Landing ✓ Loggia ✓ Arcade

✓ Cold staircase

REI 120 fire protection sleeve for Schall-ISODORN HQW® – mineral wool

pakon ag

Ref. no.	Type	Dimensions			Packing unit	Weight approx.	Price plus RTZ
		B [mm]	H [mm]	Fugenbreite [mm]	[pieces]	[kg/pcs]	[EUR/pcs]
486999	BSM-REI120-HQW-60/40/10	160	160	10	1	0.08	**19.85**
487000	BSM-REI120-HQW-60/40/20	160	160	20	1	0.10	**20.05**
487001	BSM-REI120-HQW-60/40/30	160	160	30	1	0.12	**20.35**
487002	BSM-REI120-HQW-60/40/40	160	160	40	1	0.16	**20.65**
487003	BSM-REI120-HQW-60/60/10	160	160	10	1	0.08	**19.85**
487004	BSM-REI120-HQW-60/60/20	160	160	20	1	0.10	**20.05**
487005	BSM-REI120-HQW-60/60/30	160	160	30	1	0.12	**20.35**
487006	BSM-REI120-HQW-60/60/40	160	160	40	1	0.16	**20.65**
020620	Customer specification				1	on request	**on request**

Facade

Carrying and Composite anchorS p. 268

The sandwich anchor system is intended for the connection of the facing and load-bearing shell across an insulating layer in between. The system consists of various Bearing Anchor and Shear Connectors that are used in combination. All anchors are made of high quality stainless steel and are regulated by national approvals.

Bearing Anchor and Shear Connector

The sandwich anchor system is designed to connect the facing and load bearing layer over an insulation layer in between. The system consists of various load bearing anchors and shear connectors that are used in combination with each other. All anchors are made of high-quality stainless steel and are regulated by national approvals.

Your advantages

- Practice-orientated design resistance values
- High-quality stainless steel
- No drilling of insulating boards
- Free dimensioning software

For further information, go to
www.pfeifer.info/
sandwich-anchor-system

Bearing Anchor and Shear Connector

Bearing Anchor and Shear Connector

Cylinder Anchor 270
Flat Anchor 272
Delta Anchor 275
SPA Sandwich Panel Anchor 276
Anchor Pin 278
Clip-on Pin 280
Clip-On Stirrup 281

Dimensioning software now download free of charge at:
www.pfeifer.info/software-suite-cls

Cylinder Anchor

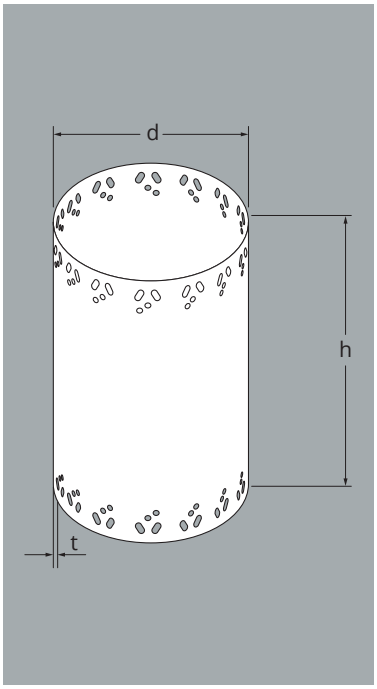

Use

- For Connect the facing and load bearing layer of concrete sandwich elements
- As a bearing anchor for transferring the dead weight of the facing layer to the load bearing layer
- Due to the round shape, even when the wall elements are rotated, the forces are transmitted evenly in every direction

Your advantages

- Thanks to its rotationally symmetrical shape, the anchor permits rotation of the sandwich element
- Thick insulating layers achievable
- No drilling of insulating boards
- High-quality stainless steel
- Free dimensioning software
- General Building Authority Approval (abZ)

Component recommendation

☑ Sandwich wall ☑ Facade

Cylinder Anchor – stainless steel

Ref. no.	Type	Dimensions			Packing unit	Weight approx.	Price plus LZ
		d [mm]	t [mm]	h [mm]	[pieces]	[kg/100 pcs]	[EUR/pcs]
176718	**ZA-51-1.5-150**	51	1.5	150	1	28.00	**14.30**
176730	**ZA-76-1.5-150**	76	1.5	150	1	42.00	**18.45**
176735	**ZA-102-1.5-150**	102	1.5	150	1	56.00	**22.20**
176740	**ZA-127-1.5-150**	127	1.5	150	1	65.00	**28.45**
176745	**ZA-153-1.5-150**	153	1.5	150	1	78.00	**32.30**
176750	**ZA-178-1.5-150**	178	1.5	150	1	94.00	**36.90**
176755	**ZA-204-1.5-150**	204	1.5	150	1	112.00	**41.80**
176758	**ZA-229-1.5-150**	229	1.5	150	1	125.00	**47.00**
176761	**ZA-255-1.5-150**	255	1.5	150	1	139.00	**51.90**
176764	**ZA-280-1.5-150**	280	1.5	150	1	141.00	**56.80**
176726	**ZA-51-1.5-175**	51	1.5	175	1	32.00	**17.60**
176731	**ZA-76-1.5-175**	76	1.5	175	1	49.00	**22.60**
176736	**ZA-102-1.5-175**	102	1.5	175	1	64.00	**27.60**
176741	**ZA-127-1.5-175**	127	1.5	175	1	82.00	**32.90**
176746	**ZA-153-1.5-175**	153	1.5	175	1	97.00	**37.90**
176751	**ZA-178-1.5-175**	178	1.5	175	1	116.00	**43.20**
176756	**ZA-204-1.5-175**	204	1.5	175	1	132.00	**48.20**
176759	**ZA-229-1.5-175**	229	1.5	175	1	148.00	**53.20**
176762	**ZA-255-1.5-175**	255	1.5	175	1	164.00	**58.10**
176765	**ZA-280-1.5-175**	280	1.5	175	1	169.00	**62.60**
176727	**ZA-51-1.5-200**	51	1.5	200	1	38.00	**20.65**
176732	**ZA-76-1.5-200**	76	1.5	200	1	57.00	**27.45**
176737	**ZA-102-1.5-200**	102	1.5	200	1	76.00	**34.10**
176742	**ZA-127-1.5-200**	127	1.5	200	1	95.00	**40.80**

Cylinder Anchor – stainless steel

Ref. no.	Type	Dimensions			Packing unit	Weight approx.	Price plus LZ
		d [mm]	t [mm]	h [mm]	[pieces]	[kg/100 pcs]	[EUR/pcs]
176747	ZA-153-1.5-200	153	1.5	200	1	114.00	**47.50**
176752	ZA-178-1.5-200	178	1.5	200	1	133.00	**54.10**
176757	ZA-204-1.5-200	204	1.5	200	1	149.00	**59.70**
176760	ZA-229-1.5-200	229	1.5	200	1	171.00	**66.00**
176763	ZA-255-1.5-200	255	1.5	200	1	189.00	**72.90**
176766	ZA-280-1.5-200	280	1.5	200	1	208.00	**78.30**
176728	ZA-51-1.5-225	51	1.5	225	1	42.00	**21.45**
176733	ZA-76-1.5-225	76	1.5	225	1	60.00	**28.35**
176738	ZA-102-1.5-225	102	1.5	225	1	86.00	**34.70**
176743	ZA-127-1.5-225	127	1.5	225	1	107.00	**41.80**
176748	ZA-153-1.5-225	153	1.5	225	1	128.00	**48.50**
176753	ZA-178-1.5-225	178	1.5	225	1	150.00	**74.90**
176768	ZA-204-1.5-225	204	1.5	225	1	171.00	**83.10**
176770	ZA-229-1.5-225	229	1.5	225	1	191.00	**92.20**
176772	ZA-255-1.5-225	255	1.5	225	1	215.00	**102.00**
176774	ZA-280-1.5-225	280	1.5	225	1	235.00	**109.50**
176729	ZA-51-1.5-260	51	1.5	260	1	46.00	**24.90**
176734	ZA-76-1.5-260	76	1.5	260	1	74.00	**32.80**
176739	ZA-102-1.5-260	102	1.5	260	1	100.00	**40.10**
176744	ZA-127-1.5-260	127	1.5	260	1	123.00	**48.50**
176749	ZA-153-1.5-260	153	1.5	260	1	135.00	**55.80**
176754	ZA-178-1.5-260	178	1.5	260	1	169.00	**86.40**
176769	ZA-204-1.5-260	204	1.5	260	1	201.00	**95.80**
176771	ZA-229-1.5-260	229	1.5	260	1	224.00	**106.50**
176773	ZA-255-1.5-260	255	1.5	260	1	248.00	**117.00**
176775	ZA-280-1.5-260	280	1.5	260	1	273.00	**126.00**
179315	ZA-51-1.5-300	51	1.5	300	1	52.00	**31.30**
179316	ZA-76-1.5-300	76	1.5	300	1	83.00	**39.30**
179317	ZA-102-1.5-300	102	1.5	300	1	103.00	**51.40**
179318	ZA-127-1.5-300	127	1.5	300	1	131.00	**63.90**
179319	ZA-153-1.5-300	153	1.5	300	1	153.00	**76.90**
179320	ZA-178-1.5-300	178	1.5	300	1	204.00	**99.80**
179321	ZA-204-1.5-300	204	1.5	300	1	206.00	**114.00**
179322	ZA-229-1.5-300	229	1.5	300	1	261.00	**128.00**
179323	ZA-255-1.5-300	255	1.5	300	1	290.00	**143.00**
179324	ZA-280-1.5-300	280	1.5	300	1	315.00	**156.50**
264736	ZA-127-1.5-340	127	1.5	340	1	149.00	**79.40**
264737	ZA-153-1.5-340	153	1.5	340	1	173.00	**98.10**
264738	ZA-178-1.5-340	178	1.5	340	1	231.00	**113.50**
264739	ZA-204-1.5-340	204	1.5	340	1	234.00	**132.00**
264741	ZA-229-1.5-340	229	1.5	340	1	296.00	**150.00**
264742	ZA-255-1.5-340	255	1.5	340	1	329.00	**169.00**
264743	ZA-280-1.5-340	280	1.5	340	1	357.00	**187.50**

Flat Anchor

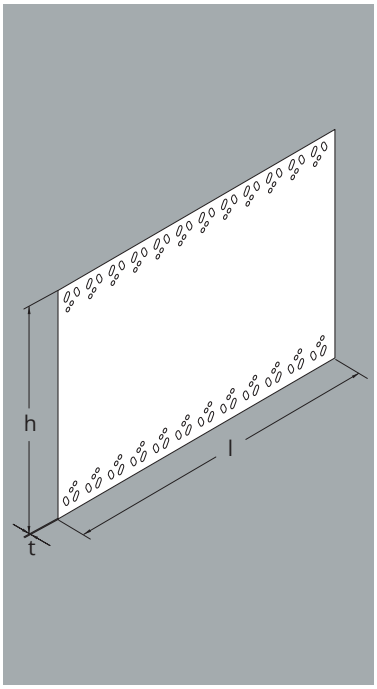

Use

- For Connect the facing and load bearing layer of concrete sandwich elements
- As a bearing or retaining anchor, prevents the horizontal shifting of the facing layer with respect to the load bearing layer
- As a bearing anchor for transferring the dead weight of the facing layer to the load bearing layer

Your advantages

- Its slimline form enables installation without major outlay
- Thick insulating layers achievable
- No drilling of insulating boards
- High-quality stainless steel
- Free dimensioning software
- General Building Authority Approval (abZ)

Component recommendation

☑ Sandwich wall ☑ Facade

Flat Anchor – stainless steel

Ref. no.	Type	Dimensions			Packing unit	Weight approx.	Price plus LZ
		l [mm]	t [mm]	h [mm]	[pieces]	[kg/100 pcs]	[EUR/pcs]
176777	FLA-80-1.5-150	80	1.5	150	25	14.00	**5.45**
176778	FLA-120-1.5-150	120	1.5	150	25	21.00	**8.00**
176780	FLA-160-1.5-150	160	1.5	150	25	28.00	**10.15**
176781	FLA-200-1.5-150	200	1.5	150	25	33.00	**12.65**
176782	FLA-240-1.5-150	240	1.5	150	25	42.00	**15.10**
176783	FLA-280-1.5-150	280	1.5	150	15	49.00	**17.70**
176784	FLA-320-1.5-150	320	1.5	150	15	54.00	**20.10**
176785	FLA-360-1.5-150	360	1.5	150	15	56.00	**22.50**
176786	FLA-400-1.5-150	400	1.5	150	15	64.00	**25.00**
176796	FLA-80-1.5-175	80	1.5	175	25	16.00	**7.45**
176797	FLA-120-1.5-175	120	1.5	175	25	25.00	**10.55**
176798	FLA-160-1.5-175	160	1.5	175	25	33.00	**12.50**
176799	FLA-200-1.5-175	200	1.5	175	25	41.00	**15.15**
176800	FLA-240-1.5-175	240	1.5	175	15	45.00	**17.85**
176801	FLA-280-1.5-175	280	1.5	175	15	54.00	**21.30**
176802	FLA-320-1.5-175	320	1.5	175	15	65.00	**26.75**
176803	FLA-360-1.5-175	360	1.5	175	15	68.00	**27.20**
176804	FLA-400-1.5-175	400	1.5	175	15	76.00	**29.75**
176787	FLA-80-1.5-200	80	1.5	200	25	19.00	**9.70**
176788	FLA-120-1.5-200	120	1.5	200	25	29.00	**12.85**
176789	FLA-160-1.5-200	160	1.5	200	25	38.00	**17.20**
176790	FLA-200-1.5-200	200	1.5	200	15	48.00	**20.90**
176791	FLA-240-1.5-200	240	1.5	200	15	57.00	**25.00**
176792	FLA-280-1.5-200	280	1.5	200	15	67.00	**29.50**
176793	FLA-320-1.5-200	320	1.5	200	15	76.00	**33.50**
176794	FLA-360-1.5-200	360	1.5	200	15	80.00	**37.90**

Flat Anchor – stainless steel

Ref. no.	Type	Dimensions			Packing unit	Weight approx.	Price plus LZ
		l [mm]	t [mm]	h [mm]	[pieces]	[kg/100 pcs]	[EUR/pcs]
176795	FLA-400-1.5-200	400	1.5	200	10	88.00	**42.00**
176806	FLA-80-1.5-225	80	1.5	225	25	22.00	**10.75**
176807	FLA-120-1.5-225	120	1.5	225	25	32.00	**14.05**
176808	FLA-160-1.5-225	160	1.5	225	25	42.00	**18.25**
176809	FLA-200-1.5-225	200	1.5	225	15	54.00	**22.30**
176810	FLA-240-1.5-225	240	1.5	225	15	63.00	**26.85**
176811	FLA-280-1.5-225	280	1.5	225	15	75.00	**32.10**
176812	FLA-320-1.5-225	320	1.5	225	15	82.00	**36.50**
176814	FLA-360-1.5-225	360	1.5	225	10	97.00	**41.10**
176815	FLA-400-1.5-225	400	1.5	225	15	108.00	**45.40**
303498	FLA-80-1.5-260	80	1.5	260	25	24.00	**12.40**
303499	FLA-120-1.5-260	120	1.5	260	15	36.00	**15.95**
303500	FLA-160-1.5-260	160	1.5	260	15	48.75	**20.85**
303501	FLA-200-1.5-260	200	1.5	260	10	60.75	**25.55**
303502	FLA-240-1.5-260	240	1.5	260	10	72.75	**28.85**
303503	FLA-280-1.5-260	280	1.5	260	5	86.25	**32.90**
303504	FLA-320-1.5-260	320	1.5	260	5	98.25	**38.50**
303505	FLA-360-1.5-260	360	1.5	260	5	111.75	**43.10**
303506	FLA-400-1.5-260	400	1.5	260	5	123.00	**47.70**
176816	FLA-80-2.0-175	80	2.0	175	25	22.00	**9.30**
176817	FLA-120-2.0-175	120	2.0	175	25	32.00	**12.50**
176818	FLA-160-2.0-175	160	2.0	175	25	43.00	**16.90**
176819	FLA-200-2.0-175	200	2.0	175	15	49.00	**19.75**
176820	FLA-240-2.0-175	240	2.0	175	15	64.00	**22.70**
176821	FLA-280-2.0-175	280	2.0	175	15	75.00	**26.50**
176822	FLA-320-2.0-175	320	2.0	175	15	79.00	**29.45**
176823	FLA-360-2.0-175	360	2.0	175	15	99.00	**32.60**
176824	FLA-400-2.0-175	400	2.0	175	15	111.00	**35.80**
176825	FLA-80-2.0-200	80	2.0	200	25	25.00	**10.55**
176826	FLA-120-2.0-200	120	2.0	200	25	37.00	**14.25**
176827	FLA-160-2.0-200	160	2.0	200	15	52.00	**19.25**
176828	FLA-200-2.0-200	200	2.0	200	15	62.00	**22.30**
176829	FLA-240-2.0-200	240	2.0	200	15	75.00	**25.80**
176830	FLA-280-2.0-200	280	2.0	200	10	86.00	**31.30**
176831	FLA-320-2.0-200	320	2.0	200	10	99.00	**36.50**
176832	FLA-360-2.0-200	360	2.0	200	5	110.00	**40.10**
176833	FLA-400-2.0-200	400	2.0	200	5	122.00	**43.90**
176834	FLA-80-2.0-225	80	2.0	225	25	28.00	**11.50**
176835	FLA-120-2.0-225	120	2.0	225	25	42.00	**15.35**
176836	FLA-160-2.0-225	160	2.0	225	15	56.00	**20.55**
176837	FLA-200-2.0-225	200	2.0	225	15	70.00	**24.35**
176838	FLA-240-2.0-225	240	2.0	225	10	85.00	**29.80**
176839	FLA-280-2.0-225	280	2.0	225	10	97.00	**34.40**
176840	FLA-320-2.0-225	320	2.0	225	5	113.00	**38.70**
176841	FLA-360-2.0-225	360	2.0	225	5	128.00	**42.30**
176842	FLA-400-2.0-225	400	2.0	225	5	141.00	**48.00**
176843	FLA-80-2.0-260	80	2.0	260	25	32.00	**20.35**
176844	FLA-120-2.0-260	120	2.0	260	15	48.00	**24.90**
176845	FLA-160-2.0-260	160	2.0	260	15	65.00	**29.75**
176846	FLA-200-2.0-260	200	2.0	260	10	81.00	**34.10**
176847	FLA-240-2.0-260	240	2.0	260	10	97.00	**38.70**

Flat Anchor – stainless steel

Ref. no.	Type	Dimensions			Packing unit	Weight approx.	Price plus LZ
		l [mm]	t [mm]	h [mm]	[pieces]	[kg/100 pcs]	[EUR/pcs]
176848	FLA-280-2.0-260	280	2.0	260	5	115.00	**44.20**
176849	FLA-320-2.0-260	320	2.0	260	5	131.00	**49.20**
176850	FLA-360-2.0-260	360	2.0	260	5	149.00	**54.00**
176851	FLA-400-2.0-260	400	2.0	260	5	164.00	**58.10**
204687	FLA-80-2.0-280	80	2.0	280	25	34.00	**24.05**
204688	FLA-120-2.0-280	120	2.0	280	15	51.00	**26.85**
204689	FLA-160-2.0-280	160	2.0	280	15	68.00	**36.00**
204690	FLA-200-2.0-280	200	2.0	280	10	86.00	**37.90**
204691	FLA-240-2.0-280	240	2.0	280	10	104.00	**42.60**
204692	FLA-280-2.0-280	280	2.0	280	5	120.00	**55.40**
204693	FLA-320-2.0-280	320	2.0	280	5	137.00	**58.70**
204694	FLA-360-2.0-280	360	2.0	280	5	154.00	**63.80**
204695	FLA-400-2.0-280	400	2.0	280	5	172.00	**69.40**
204686	FLA-80-2.0-300	80	2.0	300	50	37.00	**26.15**
204685	FLA-120-2.0-300	120	2.0	300	15	56.00	**29.35**
204684	FLA-160-2.0-300	160	2.0	300	15	74.00	**38.50**
204683	FLA-200-2.0-300	200	2.0	300	10	92.00	**39.50**
204682	FLA-240-2.0-300	240	2.0	300	5	110.00	**45.40**
204681	FLA-280-2.0-300	280	2.0	300	5	129.00	**58.80**
204679	FLA-320-2.0-300	320	2.0	300	5	148.00	**62.60**
204678	FLA-360-2.0-300	360	2.0	300	5	168.00	**67.40**
204677	FLA-400-2.0-300	400	2.0	300	5	276.00	**72.50**
217618	FLA-120-2.0-320	120	2.0	320	15	60.00	**33.70**
217543	FLA-160-2.0-320	160	2.0	320	15	79.00	**41.00**
217617	FLA-200-2.0-320	200	2.0	320	10	100.00	**44.20**
217616	FLA-240-2.0-320	240	2.0	320	5	121.00	**51.30**
217615	FLA-280-2.0-320	280	2.0	320	5	140.00	**62.30**
217544	FLA-320-2.0-320	320	2.0	320	5	163.00	**69.40**
217613	FLA-360-2.0-320	360	2.0	320	5	184.00	**76.10**
217614	FLA-400-2.0-320	400	2.0	320	5	202.00	**84.60**
264746	FLA-160-2.0-340	160	2.0	340	15	84.00	**43.30**
264747	FLA-200-2.0-340	200	2.0	340	15	106.50	**48.70**
264748	FLA-240-2.0-340	240	2.0	340	15	128.50	**57.10**
264749	FLA-280-2.0-340	280	2.0	340	15	149.00	**66.00**
264750	FLA-320-2.0-340	320	2.0	340	15	173.00	**76.00**
264751	FLA-360-2.0-340	360	2.0	340	15	195.50	**84.90**
264752	FLA-400-2.0-340	400	2.0	340	15	215.00	**96.70**
264753	FLA-160-2.0-360	160	2.0	360	15	88.90	**45.70**
264754	FLA-200-2.0-360	200	2.0	360	15	112.50	**53.40**
264755	FLA-240-2.0-360	240	2.0	360	15	136.00	**62.90**
264756	FLA-280-2.0-360	280	2.0	360	15	157.50	**69.40**
264757	FLA-320-2.0-360	320	2.0	360	15	183.50	**82.70**
264758	FLA-360-2.0-360	360	2.0	360	15	207.00	**93.70**
264759	FLA-400-2.0-360	400	2.0	360	15	227.00	**109.00**

Delta Anchor

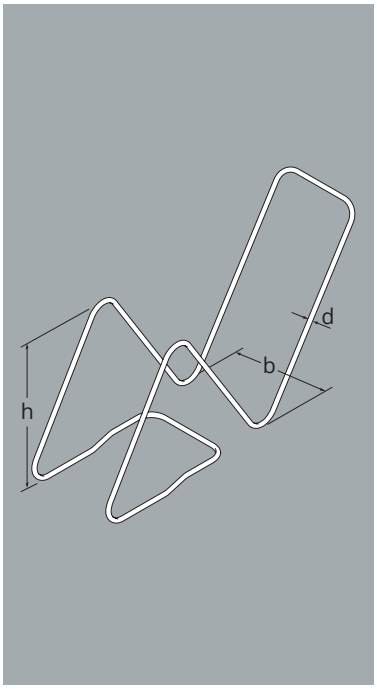

Use

- For Connect the facing and load bearing layer of concrete sandwich elements
- As a bearing or retaining anchor, prevents the horizontal shifting of the facing layer with respect to the load bearing layer

Your advantages

- Flaw and thermal bridge-free insulation
- EnEV-compliant due to lowest thermal bridges
- Thick insulating layers achievable
- No drilling of insulating boards
- High-quality stainless steel
- Free dimensioning software
- General Building Authority Approval (abZ)

Component recommendation

☑ Sandwich wall ☑ Facade

Delta Anchor – stainless steel

Ref. no.	Type	Colour coding Banderole	Dimensions			Packing unit	Weight approx.	Price plus LZ
			d [mm]	h [mm]	b [mm]	[pieces]	[kg/pcs]	[EUR/pcs]
282925	DTA-6.0-180/80	Strawberry red	6	180	80	1	0.43	**14.50**
282926	DTA-6.0-200/80	Strawberry red	6	200	80	1	0.48	**15.50**
282927	DTA-6.0-220/80	Strawberry red	6	220	80	1	0.51	**16.30**
282928	DTA-6.0-240/80	Strawberry red	6	240	80	1	0.52	**16.90**
282929	DTA-6.0-260/80	Strawberry red	6	260	80	1	0.55	**17.75**
282931	DTA-8.0-180/80	White	8	180	80	1	0.76	**21.45**
282932	DTA-8.0-200/80	White	8	200	80	1	0.87	**22.10**
282934	DTA-8.0-220/80	White	8	220	80	1	0.91	**22.35**
282935	DTA-8.0-240/80	White	8	240	80	1	0.95	**23.40**
282936	DTA-8.0-260/80	White	8	260	80	1	0.99	**24.75**
282937	DTA-8.0-280/80	White	8	280	80	1	1.09	**25.90**
282938	DTA-8.0-300/80	White	8	300	80	1	1.13	**27.00**
282939	DTA-8.0-320/80	White	8	320	80	1	1.16	**27.90**
282941	DTA-10.0-220/80	Yellow/green	10	220	80	1	1.33	**41.80**
282942	DTA-10.0-240/80	Yellow/green	10	240	80	1	1.42	**43.20**
282943	DTA-10.0-260/80	Yellow/green	10	260	80	1	1.62	**44.50**
282944	DTA-10.0-280/80	Yellow/green	10	280	80	1	1.70	**45.50**
282945	DTA-10.0-300/80	Yellow/green	10	300	80	1	1.73	**46.90**
282946	DTA-10.0-320/80	Yellow/green	10	320	80	1	1.80	**48.10**
282947	DTA-10.0-340/80	Yellow/green	10	340	80	1	1.89	**49.50**
282948	DTA-10.0-360/80	Yellow/green	10	360	80	1	1.97	**50.60**

SPA Sandwich Panel Anchor

Use

- For Connect the facing and load bearing layer of concrete sandwich elements
- Absorption of the dead weight in the facing layer as well as proportional horizontal forces from wind and temperature
- Preferred horizontal anchor for low/narrow slabs or bearing anchor for narrow/high slabs or in narrow lintel areas

Your advantages

- Installation possible with positive and negative versions of sandwich panels
- EnEV-compliant due to lowest thermal bridges
- Thick insulating layers achievable
- No drilling of insulating boards
- Minor additional reinforcement
- Very easy installation of the insulation (SPA-1)
- High-quality stainless steel
- General Building Authority Approval (abZ)

Component recommendation

✓ Sandwich wall ✓ Facade

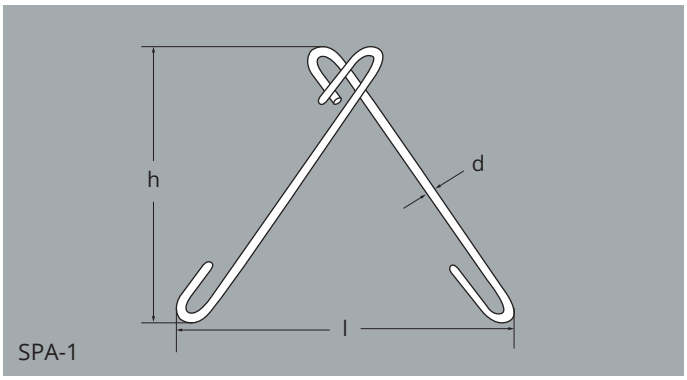

SPA-1

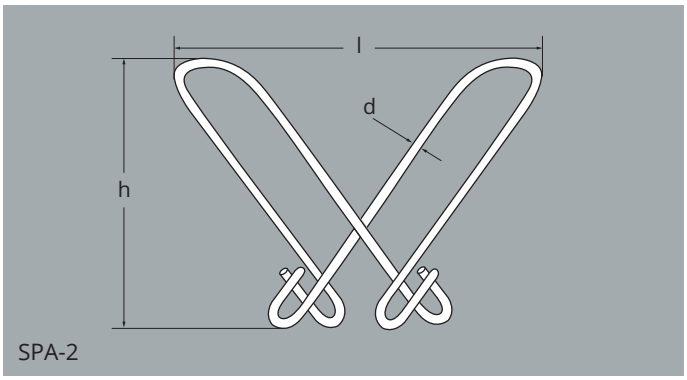

SPA-2

SPA-1 Sandwich Panel Anchor – stainless steel

Ref. no.	Type	Colour coding Banderole	Dimensions l [mm]	d [mm]	h [mm]	Weight approx. [kg/pcs]	Price plus LZ [EUR/pcs]
413995	SPA-1-5-160	Sulphur yellow	265	5.0	160	0.10	6.10
413997	SPA-1-5-180	Sulphur yellow	305	5.0	180	0.11	6.25
413998	SPA-1-5-200	Sulphur yellow	264	5.0	200	0.12	6.45
414574	SPA-1-7-160	Light pink	261	6.5	160	0.18	8.20
414575	SPA-1-7-180	Light pink	301	6.5	180	0.20	8.55
414576	SPA-1-7-200	Light pink	340	6.5	200	0.21	9.00
414577	SPA-1-7-220	Light pink	380	6.5	220	0.23	9.25
414578	SPA-1-7-240	Light pink	421	6.5	240	0.24	9.65
414579	SPA-1-7-260	Light pink	460	6.5	260	0.26	9.90
414636	SPA-1-8-220	White	378	8.0	220	0.36	10.95
414637	SPA-1-8-240	White	418	8.0	240	0.38	11.75
414638	SPA-1-8-260	White	458	8.0	260	0.40	12.05
414639	SPA-1-8-280	White	499	8.0	280	0.42	13.90

SPA-1 Sandwich Panel Anchor – stainless steel

Ref. no.	Type	Colour coding Banderole	Dimensions			Weight approx.	Price plus LZ
			l [mm]	d [mm]	h [mm]	[kg/pcs]	[EUR/pcs]
414640	SPA-1-8-300	White	538	8.0	300	0.45	**14.35**
414641	SPA-1-8-320	White	578	8.0	320	0.47	**14.80**
414580	SPA-1-9-220	Light blue	376	8.5	220	0.41	**12.00**
414581	SPA-1-9-240	Light blue	416	8.5	240	0.43	**12.40**
414582	SPA-1-9-260	Light blue	455	8.5	260	0.46	**12.90**
414583	SPA-1-9-280	Light blue	496	8.5	280	0.48	**14.85**
414584	SPA-1-9-300	Light blue	536	8.5	300	0.51	**15.35**
414585	SPA-1-9-320	Light blue	576	8.5	320	0.53	**15.85**
414586	SPA-1-9-340	Light blue	615	8.5	340	0.56	**16.45**
414587	SPA-1-9-360	Light blue	655	8.5	360	0.58	**17.00**
414588	SPA-1-9-380	Light blue	694	8.5	380	0.61	**17.60**
414589	SPA-1-9-400	Light blue	735	8.5	400	0.63	**18.10**
414590	SPA-1-10-320	Yellow/green	570	10.0	320	0.76	**26.30**
414591	SPA-1-10-340	Yellow/green	610	10.0	340	0.79	**27.50**
414592	SPA-1-10-360	Yellow/green	649	10.0	360	0.83	**28.40**
414593	SPA-1-10-380	Yellow/green	689	10.0	380	0.86	**29.10**
414594	SPA-1-10-400	Yellow/green	730	10.0	400	0.90	**29.80**

SPA-2 Sandwich Panel Anchor – stainless steel

Ref. no.	Type	Colour coding Banderole	Dimensions			Gewicht ca	Price plus LZ
			l [mm]	d [mm]	h [mm]	[kg/pcs]	[EUR/pcs]
414595	SPA-2-5-160	Sulphur yellow	265	5.0	160	0.18	**9.75**
414596	SPA-2-5-180	Sulphur yellow	305	5.0	180	0.20	**10.30**
414597	SPA-2-5-200	Sulphur yellow	264	5.0	200	0.22	**11.05**
414598	SPA-2-7-160	Light pink	261	6.5	160	0.32	**13.60**
414599	SPA-2-7-180	Light pink	301	6.5	180	0.35	**14.20**
414600	SPA-2-7-200	Light pink	340	6.5	200	0.38	**15.15**
414601	SPA-2-7-220	Light pink	380	6.5	220	0.41	**15.80**
414602	SPA-2-7-240	Light pink	421	6.5	240	0.44	**16.55**
414603	SPA-2-7-260	Light pink	460	6.5	260	0.47	**17.50**
414642	SPA-2-8-220	White	378	8.0	220	0.65	**19.35**
414643	SPA-2-8-240	White	418	8.0	240	0.69	**21.95**
414644	SPA-2-8-260	White	458	8.0	260	0.74	**23.90**
414645	SPA-2-8-280	White	499	8.0	280	0.78	**25.15**
414647	SPA-2-8-300	White	538	8.0	300	0.82	**26.20**
414648	SPA-2-8-320	White	578	8.0	320	0.87	**27.25**
414604	SPA-2-9-220	Light blue	376	8.5	220	0.74	**23.35**
414605	SPA-2-9-240	Light blue	416	8.5	240	0.79	**24.45**
414606	SPA-2-9-260	Light blue	455	8.5	260	0.84	**25.60**
414607	SPA-2-9-280	Light blue	496	8.5	280	0.89	**26.90**
414608	SPA-2-9-300	Light blue	536	8.5	300	0.94	**28.00**
414609	SPA-2-9-320	Light blue	576	8.5	320	0.99	**29.25**
414610	SPA-2-9-340	Light blue	615	8.5	340	1.04	**30.90**
414611	SPA-2-9-360	Light blue	655	8.5	360	1.09	**32.50**
414612	SPA-2-9-380	Light blue	694	8.5	380	1.14	**34.20**
414613	SPA-2-9-400	Light blue	735	8.5	400	1.19	**35.80**
414614	SPA-2-10-320	Yellow/green	569	10.0	320	1.40	**47.00**
414615	SPA-2-10-340	Yellow/green	610	10.0	340	1.47	**48.50**
414616	SPA-2-10-360	Yellow/green	649	10.0	360	1.54	**50.30**
414617	SPA-2-10-380	Yellow/green	689	10.0	380	1.61	**52.30**
414618	SPA-2-10-400	Yellow/green	730	10.0	400	1.68	**54.30**

Anchor Pin

Use

- Shear connector for use in combination with delta, flat, cylinder or SPA anchors
- For each sandwich panel, a defined number of compound anchor pins are distributed in an even grid over the entire surface of the sandwich panel
- Connector Pins arranged to form a cross can be used as holding or bearing anchors.

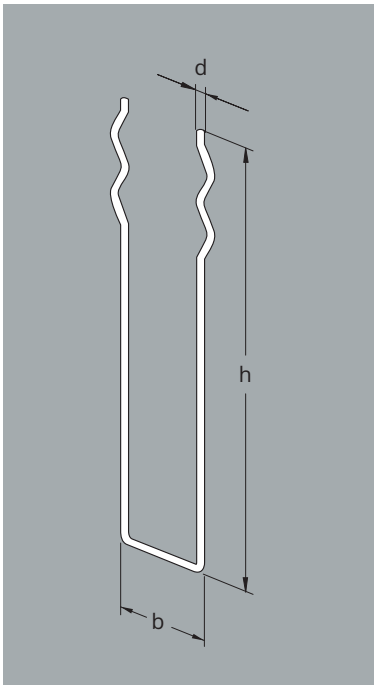

Your advantages

- Connector pin cross can also be used as a retaining or bearing anchor
- EnEV-compliant due to lowest thermal bridges
- Thick insulating layers achievable
- No drilling of insulating boards
- High-quality stainless steel
- Free dimensioning software
- General Building Authority Approval (abZ)

Component recommendation

✓ Sandwich wall ✓ Facade

Anchor pin – stainless steel

Ref. no.	Type	Dimensions			Packing unit	Weight approx.	Price plus LZ
		d [mm]	h [mm]	b [mm]	[pieces]	[kg/100 pcs]	[EUR/pcs]
176882	**VN-4-160**	4	160	43	250	3.40	**1.08**
176883	**VN-4-180**	4	180	43	250	3.80	**1.11**
176884	**VN-4-200**	4	200	43	250	4.20	**1.30**
176885	**VN-4-220**	4	220	43	250	4.60	**1.36**
176886	**VN-4-240**	4	240	43	250	5.00	**1.58**
176887	**VN-4-260**	4	260	43	250	5.30	**1.67**
176888	**VN-4-280**	4	280	43	250	5.70	**1.81**
210832	**VN-4-300**	4	300	43	250	6.20	**1.94**
220409	**VN-4-320**	4	320	43	250	6.40	**2.16**
269856	**VN-4-340**	4	340	43	250	6.60	**2.40**
176889	**VN-5-200**	5	200	45	100	7.10	**2.47**
176890	**VN-5-220**	5	220	45	100	7.60	**2.59**
176891	**VN-5-240**	5	240	45	100	8.20	**2.74**
176892	**VN-5-260**	5	260	45	100	8.90	**3.30**
176893	**VN-5-280**	5	280	45	100	9.40	**3.65**
176894	**VN-5-300**	5	300	45	100	10.00	**3.80**
176895	**VN-5-320**	5	320	45	100	10.70	**4.10**
203702	**VN-5-340**	5	340	45	100	11.40	**4.50**
203703	**VN-5-360**	5	360	45	100	12.10	**4.70**
210838	**VN-5-380**	5	380	45	100	12.80	**5.00**
210833	**VN-5-400**	5	400	45	100	13.44	**5.15**
210834	**VN-5-420**	5	420	45	100	14.12	**5.45**
210835	**VN-5-440**	5	440	45	100	14.80	**5.70**

Anchor pin – stainless steel

Ref. no.	Type	Dimensions			Packing unit	Weight approx.	Price plus LZ
		d [mm]	h [mm]	b [mm]	[pieces]	[kg/100 pcs]	[EUR/pcs]
210836	**VN-5-460**	5	460	45	100	15.60	**6.00**
210837	**VN-5-480**	5	480	45	100	16.30	**6.25**
264781	**VN-5-500**	5	500	45	100	16.60	**6.55**
264782	**VN-5-520**	5	520	45	100	16.90	**6.85**
264783	**VN-5-540**	5	540	45	100	17.20	**7.10**
210840	**VN-6-220**	6	220	47	100	10.90	**3.30**
203704	**VN-6-240**	6	240	47	100	11.80	**3.50**
203705	**VN-6-260**	6	260	47	100	12.70	**3.80**
203706	**VN-6-280**	6	280	47	100	13.60	**4.10**
203707	**VN-6-300**	6	300	47	100	14.50	**4.50**
203708	**VN-6-320**	6	320	47	100	15.40	**4.70**
176896	**VN-6-340**	6	340	47	100	16.30	**5.05**
176897	**VN-6-360**	6	360	47	100	17.20	**5.10**
176898	**VN-6-380**	6	380	47	100	18.10	**5.15**
176899	**VN-6-400**	6	400	47	100	19.00	**5.35**
176900	**VN-6-420**	6	420	47	100	19.90	**5.45**
210841	**VN-6-440**	6	440	47	100	20.80	**5.70**
210842	**VN-6-460**	6	460	47	100	21.70	**5.95**
210843	**VN-6-480**	6	480	47	100	22.60	**6.15**
264784	**VN-6-500**	6	500	47	100	23.50	**7.60**
264785	**VN-6-520**	6	520	47	100	24.40	**8.00**
264786	**VN-6-540**	6	540	47	100	25.30	**8.30**
264787	**VN-6-560**	6	560	47	100	26.20	**8.65**

Clip-on Pin

Use

- Shear connector for use in combination with delta, flat, cylinder or SPA anchors
- A defined number of clip-on pins is distributed evenly in a grid over the entire surface of the sandwich element.

Your advantages

- EnEV-compliant due to lowest thermal bridges
- Thick insulating layers achievable
- No drilling of insulating boards
- High-quality stainless steel
- Free dimensioning software
- General Building Authority Approval (abZ)

Component recommendation

✓ Sandwich wall ✓ Facade

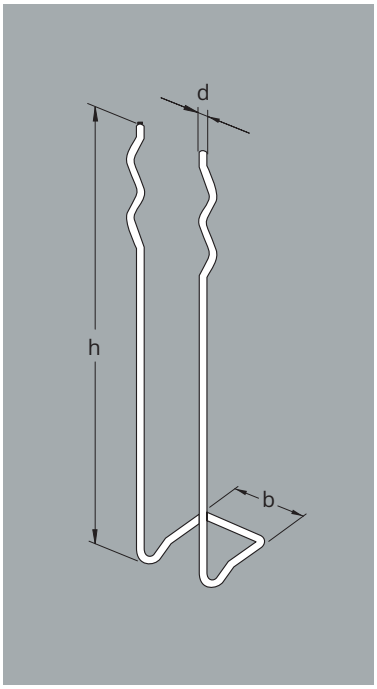

Clip-on Pin – stainless steel

Ref. no.	Type	Dimensions			Packing unit	Weight approx.	Price plus LZ
		d [mm]	h [mm]	b [mm]	[pieces]	[kg/100 pcs]	[EUR/pcs]
176906	**AN-4-140**	4	140	43	250	4.20	**1.08**
176907	**AN-4-160**	4	160	43	250	4.60	**1.16**
176908	**AN-4-180**	4	180	43	250	5.00	**1.30**
176909	**AN-4-200**	4	200	43	250	5.40	**1.43**
176910	**AN-4-220**	4	220	43	250	5.80	**1.49**
176911	**AN-4-240**	4	240	43	250	6.20	**1.63**
210845	**AN-4-260**	4	260	43	250	6.60	**1.76**
210846	**AN-4-280**	4	280	43	250	7.00	**1.90**
176912	**AN-5-200**	5	200	45	100	8.70	**3.30**
176913	**AN-5-220**	5	220	45	100	9.30	**3.35**
176914	**AN-5-240**	5	240	45	100	9.90	**3.40**
176915	**AN-5-260**	5	260	45	100	10.50	**3.50**
176916	**AN-5-280**	5	280	45	100	11.20	**3.65**
176917	**AN-5-300**	5	300	45	100	11.80	**3.80**
176918	**AN-5-320**	5	320	45	100	12.40	**4.00**
176919	**AN-5-340**	5	340	45	100	13.00	**4.10**
176920	**AN-5-360**	5	360	45	100	13.60	**4.35**
264788	**AN-5-380**	5	380	45	100	14.20	**5.05**
264789	**AN-5-400**	5	400	45	100	14.80	**5.20**
264790	**AN-5-420**	5	420	45	100	15.50	**5.50**
203711	**AN-6-200**	6	200	47	100	12.90	**5.15**
203712	**AN-6-240**	6	240	47	100	14.70	**5.35**
203713	**AN-6-280**	6	280	47	100	16.40	**5.55**
203709	**AN-6-320**	6	320	47	100	18.20	**5.95**
203710	**AN-6-360**	6	360	47	100	20.00	**6.15**
264791	**AN-6-380**	6	380	47	100	20.90	**6.40**
264792	**AN-6-400**	6	400	47	100	21.80	**6.60**
264793	**AN-6-420**	6	420	47	100	22.70	**6.95**

Clip-On Stirrup

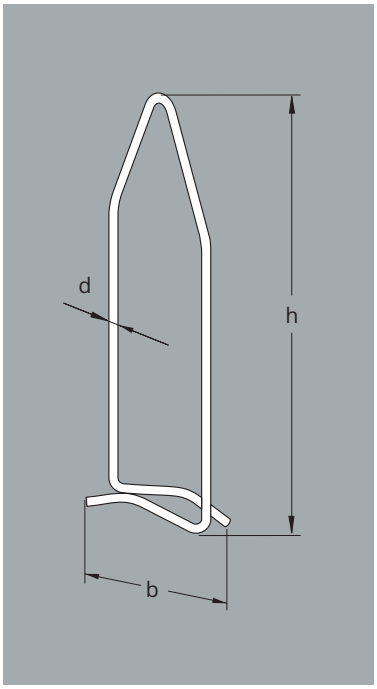

Use

- Shear connector for use in combination with delta, flat, cylinder or SPA anchors
- A defined number of clip-on stirrups is distributed evenly in a grid over the entire surface of the sandwich element

Your advantages

- EnEV-compliant due to lowest thermal bridges
- Thick insulating layers achievable
- No drilling of insulating boards
- High-quality stainless steel
- Free dimensioning software
- General Building Authority Approval (abZ)

Component recommendation

✓ Sandwich wall ✓ Facade

Clip-on Stirrup – stainless steel

Ref. no.	Type	Dimensions			Packing unit	Weight approx.	Price plus LZ
		d [mm]	h [mm]	b [mm]	[pieces]	[kg/100 pcs]	[EUR/pcs]
176925	**AB-4-140**	4	140	48	250	3.60	**1.11**
176926	**AB-4-160**	4	160	48	250	4.00	**1.22**
176927	**AB-4-180**	4	180	48	250	4.40	**1.44**
176928	**AB-4-200**	4	200	48	250	4.80	**1.58**
176929	**AB-4-220**	4	220	48	250	5.20	**1.81**
176930	**AB-4-240**	4	240	48	250	5.60	**1.92**
179347	**AB-4-260**	4	260	48	100	6.00	**2.01**
210844	**AB-4-280**	4	280	48	100	6.40	**2.18**
176931	**AB-5-200**	5	200	55	100	5.70	**2.46**
176932	**AB-5-220**	5	220	55	100	6.30	**2.56**
176933	**AB-5-240**	5	240	55	100	6.90	**2.66**
176934	**AB-5-260**	5	260	55	100	7.50	**2.83**
176935	**AB-5-280**	5	280	55	100	8.20	**3.05**
176936	**AB-5-300**	5	300	55	100	8.80	**3.10**
176937	**AB-5-320**	5	320	55	100	9.40	**3.30**
176938	**AB-5-340**	5	340	55	100	10.00	**3.35**
176939	**AB-5-360**	5	360	55	100	10.60	**3.50**
264794	**AB-5-380**	5	380	55	100	11.20	**3.80**
264795	**AB-5-400**	5	400	55	100	11.80	**4.10**
264796	**AB-5-420**	5	420	55	100	12.40	**4.35**
203718	**AB-6-200**	6	200	72	100	6.80	**3.30**
203719	**AB-6-240**	6	240	72	100	8.30	**3.50**
203728	**AB-6-280**	6	280	72	100	9.80	**3.85**
203716	**AB-6-320**	6	320	72	100	11.30	**4.10**
203717	**AB-6-360**	6	360	72	100	12.70	**4.50**
264797	**AB-6-380**	6	380	72	100	14.10	**5.00**
264798	**AB-6-400**	6	400	72	100	15.50	**5.40**
264799	**AB-6-420**	6	420	72	100	16.90	**5.80**

Reinforcing

Reinforcement connection p. 284

The reinforcement continuity system is used as a permanent reinforcement connection or continuation.
These inserted elements are simply screwed together to produce a 100 % secure, tensile and compression-force resistant connection.
Almost all necessary reinforcement connections can be made using the various coupling and reduction elements in the system.

Reinforcement continuity system

The reinforcement continuity system is used as a permanent rebar connection or continuation. These inserted elements are simply screwed together to produce a 100 % secure, tensile and compression-force resistant connection. Almost all necessary reinforcement connections can be made using the various coupling and reduction elements in the system.

Your advantages

- Safe construction stages – no protruding bars with risk of accidents
- No necessity to drill the formwork
- Approval by the building authorities for static as well as dynamic effects
- European Technical Assessment (ETA) for the screw connection

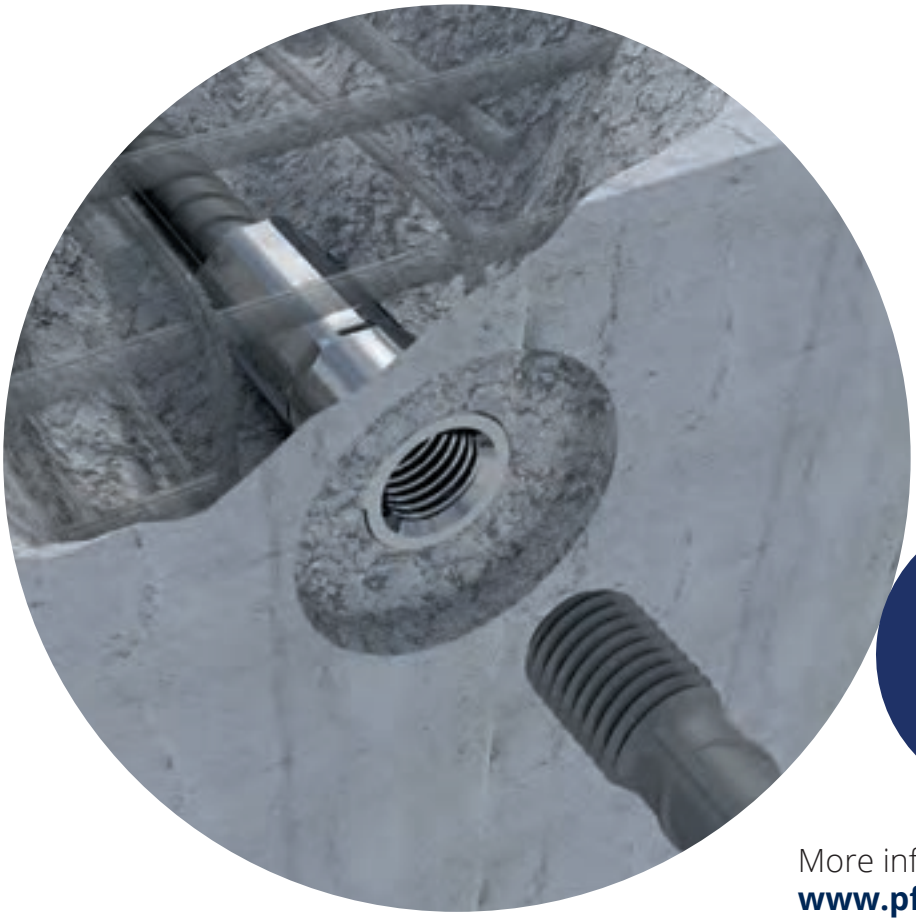

More information can be found at
www.pfeifer.info/
reinforcementsystem-ph

Reinforcement continuity system

Reinforcement continuity system

Straight Female Bar 286
Female bar in special design 288
Straight female bar in special length 288
Reducing female bar 289
Bent female bar 289
Hooked female bar 290
Bent female bar at special angle 291
Double female bar 292
Doppelmuffenstab 292
Muffenstfor up toals U-Bügel 292
Double female bar as U-shaped stirrup 293
Female bar with welded anchor plate 294
Male Bar with socket 294
Double female bar with threaded connection bolt 295
Straight Male Bar 296
Male Bar in special design 298
Male bar in special length 298
Female bar with threaded connection bolt 299
Bent male bar 300
Hooked male bar 301

Fasteners

Threaded Connection Bolt 302
Coupling Socket 303
Right-Left-Thread Verbinden Bolt 304
Reducing Bolt 305
Reducing Socket 306
Positioning Connector 307
Welding Socket 308
End Anchoring Plate 309

Accesories

Torque wrench 310
Nail Disc and PH Nail Disc 311

Straight Female Bar

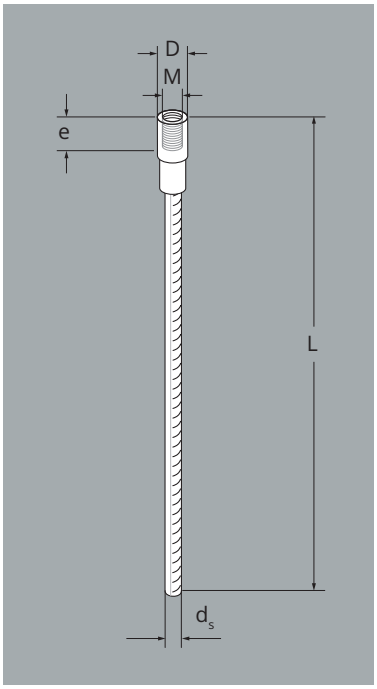

Use

- For the screw connections of concrete elements
- Straight reinforcement bar with pressed-on socket and internal thread – used in combination with male bars and coupling or reducing elements

Your advantages

- Certified for use in earthquake zones (PH-MU – PH-K – PH-MU)
- Practical means of producing safe construction sections; no protruding bars, no risk of accidents
- No necessity to drill the formwork
- Including plate for formwork fixing (details, see page 291)
- General Building Authority Approval (abZ)
- European Technical Assessment (ETA)

Bauteilempfehlung

- ✓ Column
- ✓ Foundations
- ✓ Girders
- ✓ Joist
- ✓ Bridge components
- ✓ Wind turbine tower

Straight Female Bar – black steel

Ref. no.	Type	Colour coding Plate	Thread size	Dimensions				Ladungs-träger	Packing unit	Weight approx.	Price[2] plus RTZ
				L[1] [mm]	e [mm]	D [mm]	d_s [mm]	[pieces]	[pieces]	[kg/pcs]	[EUR/pcs]
135178	PH-MU-8/350	black	M 12	350	15	16.0	8	–	1	0.15	**5.15**
119055	PH-MU-8/550	black	M 12	550	15	16.0	8	–	1	0.24	**5.60**
135179	PH-MU-10/400	–	M 14	400	17	19.2	10	–	1	0.27	**5.95**
135181	PH-MU-10/690	–	M 14	690	17	19.2	10	–	1	0.45	**6.50**
119056	PH-MU-12/400	yellow	M 16	400	20	22.3	12	200	1	0.42	**7.20**
119057	PH-MU-12/570	yellow	M 16	570	20	22.3	12	200	1	0.57	**7.25**
119058	PH-MU-12/800	yellow	M 16	800	20	22.3	12	300	1	0.78	**8.20**
119059	PH-MU-12/1500	yellow	M 16	1500	20	22.3	12	200	1	1.40	**12.40**
119061	PH-MU-14/400	blue	M 18	400	22	25.5	14	240	1	0.61	**8.80**
119062	PH-MU-14/660	blue	M 18	660	22	25.5	14	200	1	0.90	**9.25**
119063	PH-MU-14/930	blue	M 18	930	22	25.5	14	200	1	1.23	**10.40**
119064	PH-MU-14/1500	blue	M 18	1500	22	25.5	14	150	1	1.91	**13.50**
119065	PH-MU-16/400	white	M 20	400	24	28.8	16	200	1	0.77	**9.90**
119067	PH-MU-16/1020	white	M 20	1020	24	28.8	16	200	1	1.78	**11.55**
119069	PH-MU-16/1440	white	M 20	1440	24	28.8	16	200	1	2.43	**13.30**
119070	PH-MU-16/2000	white	M 20	2000	24	28.8	16	50	1	3.30	**18.95**
119071	PH-MU-20/400	grey	M 24	400	32	35.3	20	100	1	1.22	**11.30**
119073	PH-MU-20/1280	grey	M 24	1280	32	35.3	20	300	1	3.45	**16.45**
119075	PH-MU-20/1800	grey	M 24	1800	32	35.3	20	125	1	4.73	**20.10**
119076	PH-MU-20/3000	grey	M 24	3000	32	35.3	20	50	1	7.69	**31.00**
119078	PH-MU-25/400	red	M 30	400	40	44.1	25	150	1	2.07	**15.00**
119081	PH-MU-25/1600	red	M 30	1600	40	44.1	25	150	1	6.70	**26.25**
119082	PH-MU-25/2260	red	M 30	2260	40	44.1	25	50	1	9.24	**31.90**
119083	PH-MU-25/3600	red	M 30	3600	40	44.1	25	35	1	14.50	**48.70**
119084	PH-MU-28/400	black	M 36	400	42	51.0	28	75	1	2.75	**19.15**
119088	PH-MU-28/1790	black	M 36	1790	42	51.0	28	100	1	9.48	**34.10**
119089	PH-MU-28/2530	black	M 36	2530	42	51.0	28	50	1	13.05	**43.30**
119090	PH-MU-28/3600	black	M 36	3600	42	51.0	28	50	1	18.22	**61.70**
135176	PH-MU-32/2000	–	M 42	2000	52	55.8	32	–	1	13.40	**61.40**
135363	PH-MU-32/2900	–	M 42	2900	52	55.8	32	–	1	20.10	**77.90**
149175	PH-MU-40/2200	–	M 52	2200	70	70.0	40	–	1	24.00	**95.10**
149176	PH-MU-40/3500	–	M 52	3500	70	70.0	40	–	1	37.00	**123.50**

[1] Length without nail disc or PH Nail Disc. Special lengths on request.
[2] Delivery including nail disc or PH Nail Disc (free of charge)

Additional work – bent female bar (standard lengths)

Type	Surcharge plus raw material surcharge up to 9 pieces [EUR/pcs]	Surcharge plus raw material surcharge up to 10 pieces [EUR/pcs]	Surcharge plus raw material surcharge up to 50 pieces [EUR/pcs]	Surcharge plus raw material surcharge up to 100 pieces [EUR/pcs]
PH-MU-8	4.15	2.75	1.75	1.32
PH-MU-10	4.45	2.97	1.91	1.43
PH-MU-12	4.85	3.20	2.12	1.43
PH-MU-14	4.85	3.20	2.12	1.64
PH-MU-16	6.35	4.15	2.33	1.80
PH-MU-20	6.55	4.40	2.54	2.01
PH-MU-25	8.40	5.60	2.91	2.81
PH-MU-28	10.95	7.40	5.05	4.05
PH-MU-32/40	on request	on request	on request	on request

Additional work – shorten female bar (standard lengths)

Type	Surcharge plus RTZ for up to9 Pieces [EUR/pcs]	Surcharge plus RTZ for up to10 Pieces [EUR/pcs]	Surcharge plus RTZ for up to50 Pieces [EUR/pcs]	Surcharge plus RTZ for up to100 Pieces [EUR/pcs]
PH-MU-8	5.10	2.97	1.75	1.16
PH-MU-10	5.10	2.97	1.75	1.16
PH-MU-12	5.10	2.97	1.75	1.22
PH-MU-14	5.10	2.97	1.75	1.22
PH-MU-16	6.55	4.00	1.75	1.43
PH-MU-20	7.15	4.30	2.22	1.43
PH-MU-25	8.60	5.50	2.65	1.64
PH-MU-28	11.00	7.70	5.25	1.64
PH-MU-32/40	on request	on request	on request	on request

Female bar in special design
Straight female bar in special length

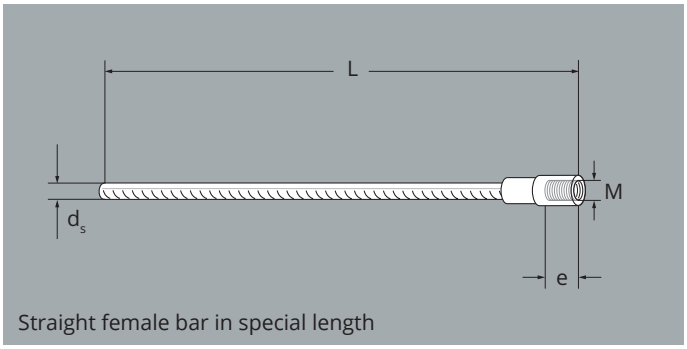

Straight female bar in special length

Straight female bar in special length – black steel

Ref. no.	Type	Thread size	Dimensions				Price[2] plus RTZ
			L[1] [mm]	L_{min} [mm]	e [mm]	d_s [mm]	[EUR/pcs]
020028	**PH-MUL-8**	M 12	Customer specification	160	15	8	**on request**
020029	**PH-MUL-10**	M 14	Customer specification	192	17	10	**on request**
020030	**PH-MUL-12**	M 16	Customer specification	223	20	12	**on request**
020031	**PH-MUL-14**	M 18	Customer specification	255	22	14	**on request**
020032	**PH-MUL-16**	M 20	Customer specification	288	24	16	**on request**
020033	**PH-MUL-20**	M 24	Customer specification	353	32	20	**on request**
020034	**PH-MUL-25**	M 30	Customer specification	441	40	25	**on request**
020035	**PH-MUL-28**	M 36	Customer specification	510	42	28	**on request**
020036	**PH-MUL-32**	M 42	Customer specification	558	52	32	**on request**
020037	**PH-MUL-40**	M 52	Customer specification	700	70	40	**on request**

CE

Reducing female bar

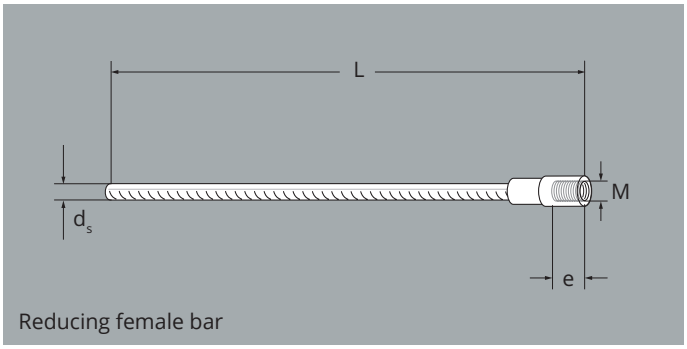

Reducing female bar

Reducing female bar – black steel

Ref. no.	Type	Thread size	Dimensions				Price[2] plus RTZ
			L[1] [mm]	L_{min} [mm]	e [mm]	d_s [mm]	[EUR/pcs]
020203	PH-MUR-12/10	M 14	Customer specification	223	20	12	on request
020204	PH-MUR-14/12	M 16	Customer specification	255	22	14	on request
020205	PH-MUR-16/14	M 18	Customer specification	288	24	16	on request
020206	PH-MUR-20/16	M 20	Customer specification	353	32	20	on request
020207	PH-MUR-25/20	M 24	Customer specification	441	40	25	on request
020208	PH-MUR-28/25	M 30	Customer specification	510	42	28	on request
020209	PH-MUR-32/28	M 36	Customer specification	558	52	32	on request
020210	PH-MUR-40/32	M 42	Customer specification	700	70	40	on request

[1] Length without nail disc or PH Nail Disc
[2] Delivery including nail disc or PH Nail Disc (free of charge)

Bent female bar

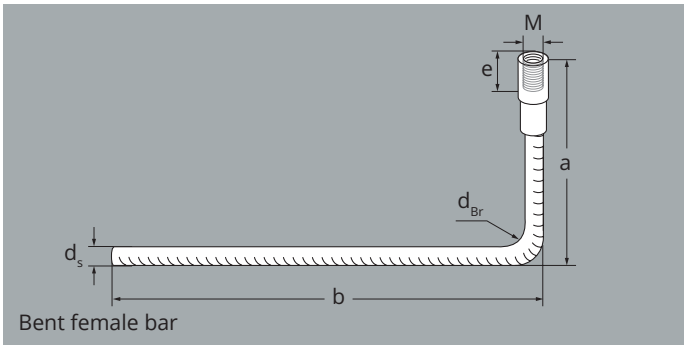

Bent female bar

Bent female bar – black steel

Ref. no.	Type	Thread size	Dimensions							Price[2] plus RTZ
			e [mm]	a[1] [mm]	a_{min} [mm]	b [mm]	b_{min} [mm]	d_s [mm]	d_{Br}[2] [mm]	[EUR/pcs]
020038	PH-MB-8	M 12	15	Customer specification	120	Customer specification	120	8	80	on request
020039	PH-MB-10	M 14	17	Customer specification	136	Customer specification	120	10	100	on request
020040	PH-MB-12	M 16	20	Customer specification	150	Customer specification	130	12	120	on request
020041	PH-MB-14	M 18	22	Customer specification	170	Customer specification	130	14	140	on request
020042	PH-MB-16	M 20	24	Customer specification	200	Customer specification	150	16	160	on request
020043	PH-MB-20	M 24	32	Customer specification	250	Customer specification	220	20	200	on request
020044	PH-MB-25	M 30	40	Customer specification	300	Customer specification	260	25	250	on request
020045	PH-MB-28	M 36	42	Customer specification	340	Customer specification	250	28	280	on request
020046	PH-MB-32	M 42	52	Customer specification	475	Customer specification	550	32	320	on request
020047	PH-MB-40	M 52	70	Customer specification	555	Customer specification	600	40	400	on request

CE

Hooked female bar

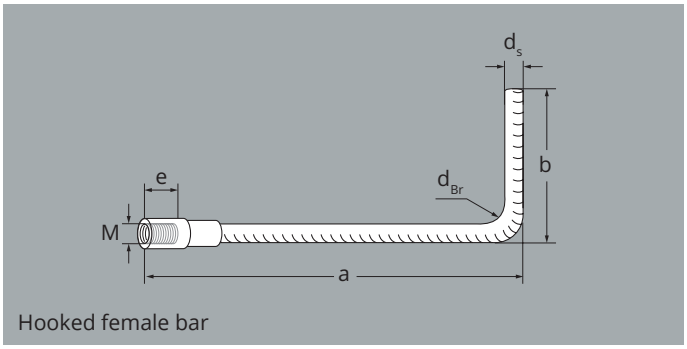

Hooked female bar

Muffenstfor up tomit Winkelhaken – Stahl blank

Ref. no.	Type	Thread size	Dimensions							Price[2] plus RTZ
			e [mm]	a[1] [mm]	a_{min} [mm]	b [mm]	b_{min} [mm]	d_s [mm]	d_{Br} [mm]	[EUR/pcs]
020048	**PH-MB-8**	M 12	15	Customer specification	85	Customer specification	185	8	32	**on request**
020049	**PH-MB-10**	M 14	17	Customer specification	85	Customer specification	85	10	40	**on request**
020050	**PH-MB-12**	M 16	20	Customer specification	120	Customer specification	110	12	48	**on request**
020051	**PH-MB-14**	M 18	22	Customer specification	125	Customer specification	130	14	56	**on request**
020052	**PH-MB-16**	M 20	24	Customer specification	140	Customer specification	140	16	64	**on request**
020053	**PH-MB-20**	M 24	32	Customer specification	210	Customer specification	190	20	140	**on request**
020054	**PH-MB-25**	M 30	40	Customer specification	260	Customer specification	210	25	175	**on request**
020055	**PH-MB-28**	M 36	42	Customer specification	280	Customer specification	220	28	200	**on request**
020056	**PH-MB-32**	M 42	52	Customer specification	355	Customer specification	500	32	220	**on request**
020057	**PH-MB-40**	M 52	70	Customer specification	380	Customer specification	500	40	300	**on request**

[1] Length without nail disc or PH Nail Disc
[2] Bending roll diameter 10 d_s, other bending roll diameters on request
[3] Delivery including nail disc or PH Nail Disc (free of charge)

Bent female bar at special angle

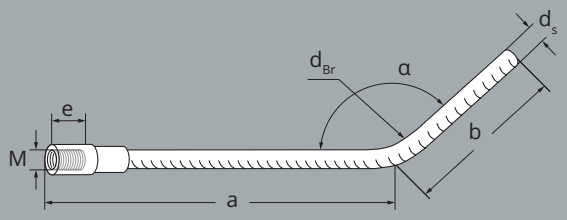

Bent female bar at special angle

Bent female bar at special angle – black steel

Ref. no.	Type	Thread size	Dimensions					Angle	Price[2] plus RTZ
			e [mm]	a[1] [mm]	b [mm]	d_s [mm]	d_{Br} [mm]	α [°]	[EUR/pcs]
020387	**PH-MB-8**	M 12	15	Customer specification	Customer specification	8	80	Customer specification	**on request**
020388	**PH-MB-10**	M 14	17	Customer specification	Customer specification	10	100	Customer specification	**on request**
020389	**PH-MB-12**	M 16	20	Customer specification	Customer specification	12	120	Customer specification	**on request**
020390	**PH-MB-14**	M 18	22	Customer specification	Customer specification	14	140	Customer specification	**on request**
020391	**PH-MB-16**	M 20	24	Customer specification	Customer specification	16	160	Customer specification	**on request**
020392	**PH-MB-20**	M 24	32	Customer specification	Customer specification	20	200	Customer specification	**on request**
020393	**PH-MB-25**	M 30	40	Customer specification	Customer specification	25	250	Customer specification	**on request**
020394	**PH-MB-28**	M 36	42	Customer specification	Customer specification	28	280	Customer specification	**on request**
020395	**PH-MB-32**	M 42	52	Customer specification	Customer specification	32	320	Customer specification	**on request**
020396	**PH-MB-40**	M 52	70	Customer specification	Customer specification	40	400	Customer specification	**on request**

CE

Doppelmuffenstab

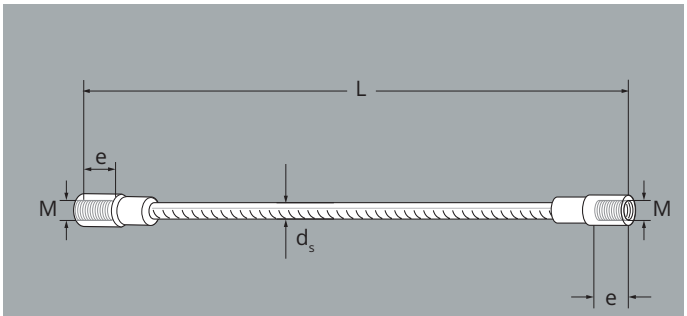

Doppelmuffenstab

Doppelmuffenstfor up to– Stahl blank

Ref. no.	Type	Thread size	Dimensions				Price[2] plus RTZ
			L[1] [mm]	L_{min} [mm]	e [mm]	d_s [mm]	[EUR/pcs]
020058	PH-DM-8	M 12	Customer specification	160	15	8	on request
020059	PH-DM-10	M 14	Customer specification	192	17	10	on request
020060	PH-DM-12	M 16	Customer specification	223	20	12	on request
020061	PH-DM-14	M 18	Customer specification	255	22	14	on request
020062	PH-DM-16	M 20	Customer specification	288	24	16	on request
020063	PH-DM-20	M 24	Customer specification	353	32	20	on request
020064	PH-DM-25	M 30	Customer specification	441	40	25	on request
020065	PH-DM-28	M 36	Customer specification	510	42	28	on request
020066	PH-DM-32	M 42	Customer specification	558	52	32	on request
020067	PH-DM-40	M 52	Customer specification	700	70	40	on request

[1] Länge ohne Steckteller PH oder Nagelteller
[2] Lieferung inklusive der Steckteller PH oder Nagelteller (kostenlos)

CE

Muffenstfor up toals U-Bügel

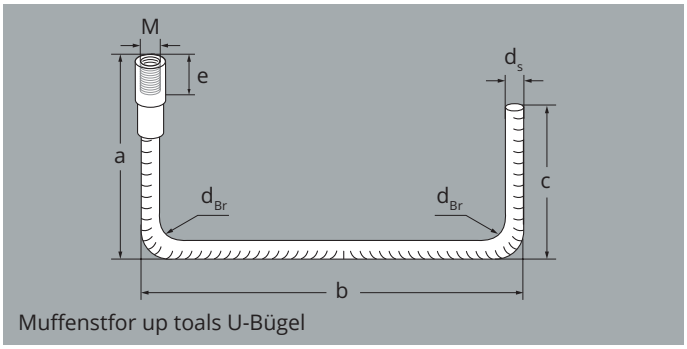

Muffenstfor up toals U-Bügel

Muffenstfor up toals U-Bügel – Stahl blank

Ref. no.	Type	Thread size[1]	Dimensions					Price[2] plus RTZ
			a[1] [mm]	b [mm]	c [mm]	d_s [mm]	d_{Br}[2] [mm]	[EUR/pcs]
020328	PH-U	–	Customer specification	Customer specification	Customer specification	Customer specification	Customer specification	on request

[1] Abhängig vom gewählten Stabdurchmesser d_s
[2] Länge ohne Steckteller PH oder Nagelteller
[3] Lieferung inklusive der Steckteller PH oder Nagelteller (kostenlos)

CE

Double female bar as U-shaped stirrup

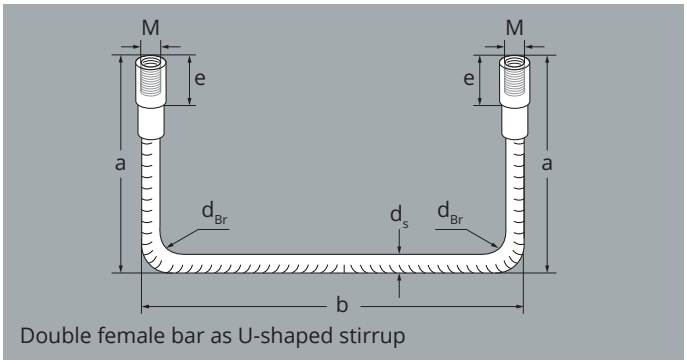

Double female bar as U-shaped stirrup

Double female bar as U-shaped stirrup – black steel

Ref. no.	Type	Thread size	Dimensions							Price[2] plus RTZ
			e [mm]	a[1] [mm]	a_{min} [mm]	b [mm]	b_{min} [mm]	d_s [mm]	d_{Br}[2] [mm]	[EUR/pcs]
020068	**PH-DU-8**	M 12	15	Customer specification	110	Customer specification	280	8	80	**on request**
020069	**PH-DU10**	M 14	17	Customer specification	135	Customer specification	280	10	100	**on request**
020070	**PH-DU-12**	M 16	20	Customer specification	150	Customer specification	280	12	120	**on request**
020071	**PH-DU-14**	M 18	22	Customer specification	170	Customer specification	280	14	140	**on request**
020072	**PH-DU-16**	M 20	24	Customer specification	200	Customer specification	280	16	160	**on request**
020073	**PH-DU-20**	M 24	32	Customer specification	250	Customer specification	620	20	200	**on request**
020074	**PH-DU-25**	M 30	40	Customer specification	300	Customer specification	630	25	250	**on request**
020075	**PH-DU-28**	M 36	42	Customer specification	350	Customer specification	640	28	280	**on request**
020076	**PH-DU-32**	M 42	52	Customer specification	380	Customer specification	650	32	320	**on request**
020077	**PH-DU-40**	M 52	70	Customer specification	490	Customer specification	680	40	400	**on request**

[1] Length without nail disc or PH Nail Disc
[2] Bending roll diameter 10 d_s, other bending roll diameters on request
[3] Delivery including nail disc or PH Nail Disc (free of charge)

CE

Female bar with welded anchor plate

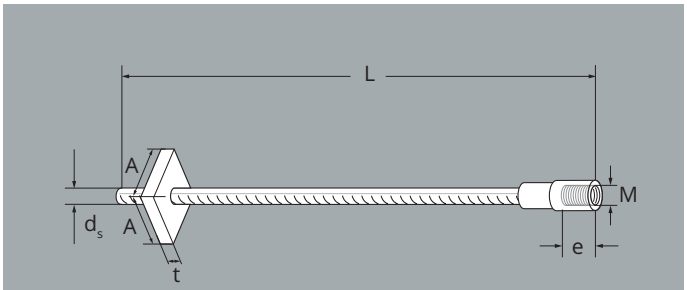

Female bar with welded anchor plate

Female bar with welded anchor plate – black steel

Ref. no.	Type	Thread size	Dimensions						Price[2] plus RTZ
			L[1] [mm]	L_{min} [mm]	e [mm]	d [mm]	d_s [mm]	A [mm]	[EUR/pcs]
020080	PH-AP-12	M 16	Customer specification	223	20	10	12	50	on request
020081	PH-AP-14	M 18	Customer specification	255	22	10	14	50	on request
020082	PH-AP-16	M 20	Customer specification	288	24	12	16	70	on request
020083	PH-AP-20	M 24	Customer specification	353	32	12	20	70	on request
020084	PH-AP-25	M 30	Customer specification	441	40	20	25	90	on request
020085	PH-AP-28	M 36	Customer specification	510	42	20	28	100	on request
020086	PH-AP-32	M 42	Customer specification	558	52	20	32	110	on request

[1] Length without nail disc or PH Nail Disc
[2] Delivery including nail disc or PH Nail Disc (free of charge)

CE

Male Bar with socket

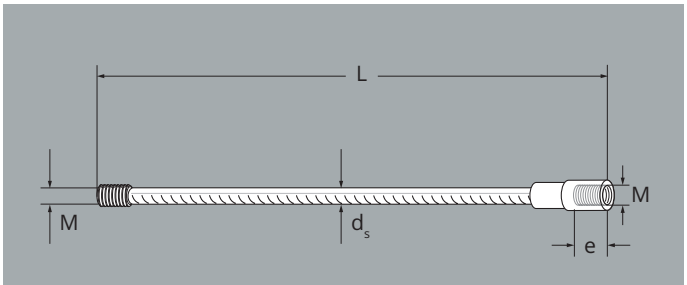

Male Bar with socket

Male bar with socket – black steel

Ref. no.	Type	Thread size	Dimensions				Price[2] plus RTZ
			L[1] [mm]	L_{min} [mm]	e [mm]	d_s [mm]	[EUR/pcs]
020022	PH-AM-12	M 16	Customer specification	223	20	12	on request
020023	PH-AM-14	M 18	Customer specification	255	22	14	on request
020024	PH-AM-16	M 20	Customer specification	288	24	16	on request
020025	PH-AM-20	M 24	Customer specification	353	32	20	on request
020026	PH-AM-25	M 30	Customer specification	441	40	25	on request
020027	PH-AM-28	M 36	Customer specification	510	42	28	on request

[1] Length without nail disc or PH Nail Disc
[2] Delivery including nail disc or PH Nail Disc (free of charge)

CE

Double female bar with threaded connection bolt

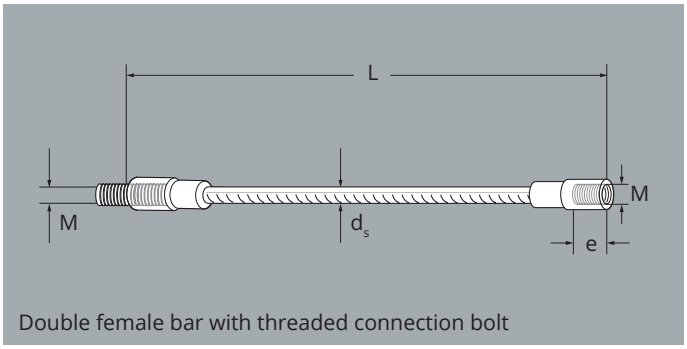

Double female bar with threaded connection bolt

Double female bar – black steel

Ref. no.	Type	Thread size	Dimensions				Price[2] plus RTZ
			L[1] [mm]	L_{min} [mm]	e [mm]	d_s [mm]	[EUR/pcs]
020308	**PH-DMK-8**	M 12	Customer specification	160	15	8	**on request**
020309	**PH-DMK-10**	M 14	Customer specification	192	17	10	**on request**
020310	**PH-DMK-12**	M 16	Customer specification	223	20	12	**on request**
020311	**PH-DMK-14**	M 18	Customer specification	255	22	14	**on request**
020312	**PH-DMK-16**	M 20	Customer specification	288	24	16	**on request**
020313	**PH-DMK-20**	M 24	Customer specification	353	32	20	**on request**
020314	**PH-DMK-25**	M 30	Customer specification	441	40	25	**on request**
020315	**PH-DMK-28**	M 36	Customer specification	510	42	28	**on request**
020316	**PH-DMK-32**	M 42	Customer specification	558	52	32	**on request**
020317	**PH-DMK-40**	M 52	Customer specification	700	70	40	**on request**

[1] Length without nail disc or PH Nail Disc
[2] Delivery including nail disc or PH Nail Disc (free of charge)

CE

Straight Male Bar

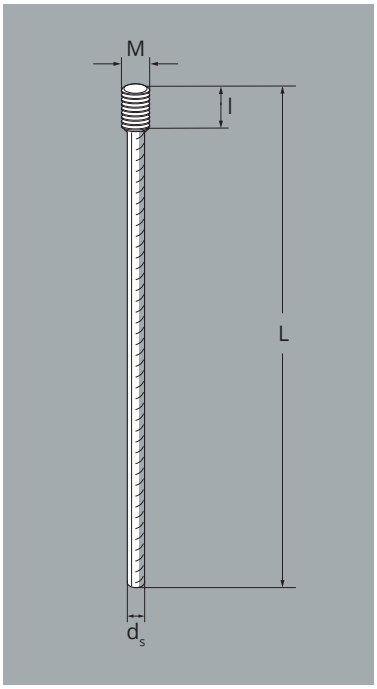

Use

- For the screw connections of concrete elements
- Straight reinforcement bar with pressed-on socket and external thread – used in combination with female bars and coupling or reducing elements

Your advantages

- Highest dynamic resistances (PH-A – PH-KM – PH-A)
- Practical means of producing safe construction sections; no protruding bars, no risk of accidents
- No necessity to drill the formwork
- Colour-coded thread protection caps for quick assignment of the system size
- General Building Authority Approval (abZ)
- European Technical Assessment (ETA)

Component recommendation

- ✓ Column
- ✓ Foundations
- ✓ Girders
- ✓ Joist
- ✓ Bridge components
- ✓ Wind turbine tower

Straight male bar – black steel

Ref. no.	Type	Colour coding protective cap	Thread size	Dimensions			Load carrier	Packing unit	Weight approx.	Price plus RTZ
				L [mm]	l [cm]	d_s [mm]	[pieces]	[pieces]	[kg/pcs]	[EUR/pcs]
235683	PH-A-12/400	yellow	M 16	400	1.7	12	200	1	0.36	**4.65**
235684	PH-A-12/570	yellow	M 16	570	1.7	12	300	1	0.51	**5.80**
235685	PH-A-12/800	yellow	M 16	800	1.7	12	300	1	0.71	**5.95**
235686	PH-A-12/1500	yellow	M 16	1500	1.7	12	200	1	1.33	**8.15**
236452	PH-A-14/400	blue	M 18	400	2.0	14	150	1	0.40	**5.20**
236453	PH-A-14/660	blue	M 18	660	2.0	14	150	1	0.80	**7.20**
236454	PH-A-14/930	blue	M 18	930	2.0	14	200	1	1.12	**8.00**
236455	PH-A-14/1500	blue	M 18	1500	2.0	14	100	1	1.81	**9.65**
236457	PH-A-16/400	white	M 20	400	2.3	16	200	1	0.63	**5.95**
236459	PH-A-16/1020	white	M 20	1020	2.3	16	300	1	1.61	**8.85**
236461	PH-A-16/1440	white	M 20	1440	2.3	16	200	1	2.27	**9.95**
236462	PH-A-16/2000	white	M 20	2000	2.3	16	100	1	3.15	**12.55**
236464	PH-A-20/400	grey	M 24	400	3.0	20	300	1	0.99	**7.55**
236465	PH-A-20/1280	grey	M 24	1280	3.0	20	300	1	3.16	**14.50**
236466	PH-A-20/1800	grey	M 24	1800	3.0	20	200	1	4.44	**17.00**
236467	PH-A-20/3000	grey	M 24	3000	3.0	20	125	1	7.40	**24.25**
236468	PH-A-25/400	red	M 30	400	3.8	25	300	1	1.55	**10.65**
236469	PH-A-25/1600	red	M 30	1600	3.8	25	125	1	6.17	**22.80**
236470	PH-A-25/2260	red	M 30	2260	3.8	25	100	1	8.71	**29.50**
236471	PH-A-25/3600	red	M 30	3600	3.8	25	50	1	13.87	**40.10**
235687	PH-A-28/400	black	M 36	400	4.0	28	150	1	1.93	**12.55**
235688	PH-A-28/1790	black	M 36	1790	4.0	28	75	1	8.65	**29.70**
235689	PH-A-28/2530	black	M 36	2530	4.0	28	75	1	12.23	**37.90**
235690	PH-A-28/3600	black	M 36	3600	4.0	28	50	1	17.90	**49.20**
377759	PH-A-32/2000	–	M 42	2000	5.0	32	–	1	12.94	**55.40**
419886	PH-A-32/2900	–	M 42	2900	5.0	32	–	1	18.62	**72.30**

CE

Additional work – shorten male bar (standard lengths)

Type	Surcharge plus RTZ for up to9 Pieces [EUR/pcs]	Surcharge plus RTZ for up to10 Pieces [EUR/pcs]	Surcharge plus RTZ for up to50 Pieces [EUR/pcs]	Surcharge plus RTZ for up to100 Pieces [EUR/pcs]
PH-A 12	5.10	2.97	1.75	1.22
PH-A 14	5.10	2.97	1.75	1.22
PH-A 16	6.55	4.00	1.75	1.43
PH-A 20	7.15	4.30	2.22	1.43
PH-A 25	8.60	5.50	2.65	1.64
PH-A 28	11.00	7.70	5.25	1.64
PH-A 32	on request	on request	on request	on request

Male Bar in special design
Male bar in special length

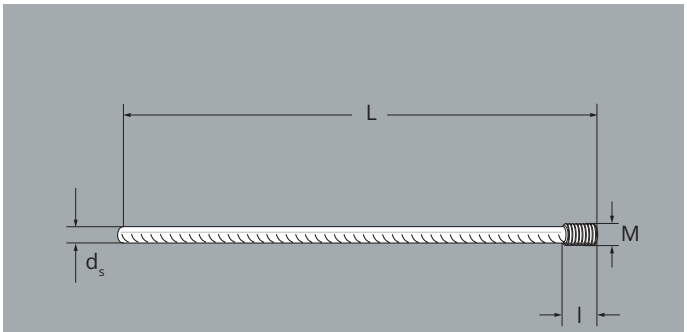

Male bar

Straight male bar in special length – black steel

Ref. no.	Type	Thread size	Dimensions			Price plus RTZ
			L [mm]	l [mm]	d_s [mm]	[EUR/pcs]
020004	PH-AL-12	M 16	Customer specification	17	12	on request
020005	PH-AL-14	M 18	Customer specification	20	14	on request
020006	PH-AL-16	M 20	Customer specification	23	16	on request
020007	PH-AL-20	M 24	Customer specification	30	20	on request
020008	PH-AL-25	M 30	Customer specification	38	25	on request
020009	PH-AL-28	M 36	Customer specification	40	28	on request
020433	PH-AL-32	M 42	Customer specification	50	32	on request

CE

Female bar with threaded connection bolt

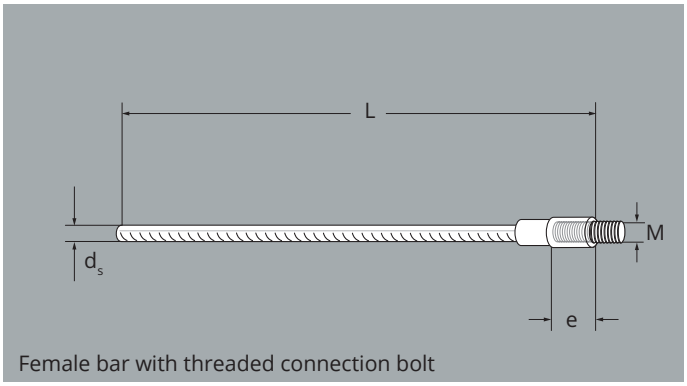

Female bar with threaded connection bolt

Female bar with threaded connection bolt – black steel

Ref. no.	Type	Thread size	Dimensions				Price plus RTZ
			L [mm]	L_{min} [mm]	e [mm]	d_s [mm]	[EUR/pcs]
020318	**PH-MUK-8**	M 12	Customer specification	160	15	8	**on request**
020319	**PH-MUK-10**	M 14	Customer specification	192	17	10	**on request**
020320	**PH-MUK-12**	M 16	Customer specification	223	20	12	**on request**
020321	**PH-MUK-14**	M 18	Customer specification	255	22	14	**on request**
020322	**PH-MUK-16**	M 20	Customer specification	288	24	16	**on request**
020323	**PH-MUK-20**	M 24	Customer specification	353	32	20	**on request**
020324	**PH-MUK-25**	M 30	Customer specification	441	40	25	**on request**
020325	**PH-MUK-28**	M 36	Customer specification	510	42	28	**on request**
020326	**PH-MUK-32**	M 42	Customer specification	558	52	32	**on request**
020327	**PH-MUK-40**	M 52	Customer specification	700	70	40	**on request**

CE

Bent male bar

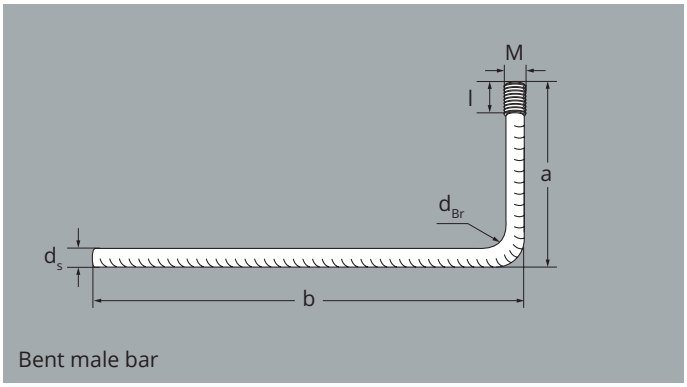

Bent male bar

Bent male bar – black steel

Ref. no.	Type	Thread size	Dimensions							Price plus RTZ
			l [mm]	a [mm]	a_{min} [mm]	b [mm]	b_{min} [mm]	d_s [mm]	d_{Br} [1)] [mm]	[EUR/pcs]
020010	**PH-AB-12**	M 16	17	Customer specification	164	Customer specification	164	12	120	**on request**
020011	**PH-AB-14**	M 18	20	Customer specification	193	Customer specification	193	14	140	**on request**
020012	**PH-AB-16**	M 20	23	Customer specification	223	Customer specification	223	16	160	**on request**
020013	**PH-AB-20**	M 24	30	Customer specification	267	Customer specification	267	20	200	**on request**
020014	**PH-AB-25**	M 30	38	Customer specification	324	Customer specification	324	25	250	**on request**
020015	**PH-AB-28**	M 36	40	Customer specification	358	Customer specification	358	28	280	**on request**

[1)] Bending roll diameter 10 ds, other bending roll diameters on request

CE

Hooked male bar

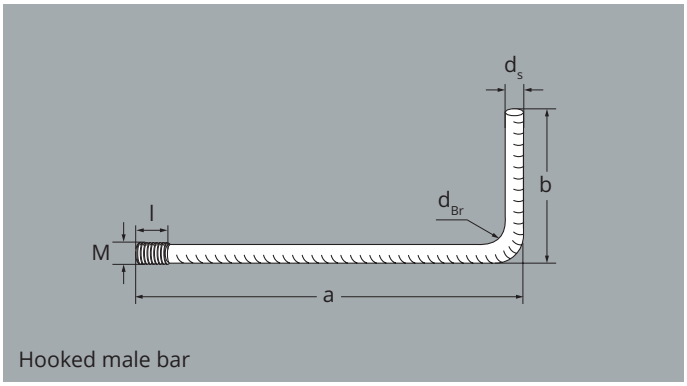

Hooked male bar

Hooked male bar – black steel

Ref. no.	Type	Thread size	Dimensions							Price plus RTZ
			l [mm]	a [mm]	a_{min} [mm]	b [mm]	b_{min} [mm]	d_s [mm]	d_{Br} [mm]	[EUR/pcs]
020016	**PH-AW-12**	M 16	17	Customer specification	97	Customer specification	97	12	48	**on request**
020017	**PH-AW-14**	M 18	20	Customer specification	114	Customer specification	114	14	56	**on request**
020018	**PH-AW-16**	M 20	23	Customer specification	126	Customer specification	126	16	64	**on request**
020019	**PH-AW-20**	M 24	30	Customer specification	188	Customer specification	188	20	140	**on request**
020020	**PH-AW-25**	M 30	38	Customer specification	232	Customer specification	232	25	175	**on request**
020021	**PH-AW-28**	M 36	40	Customer specification	268	Customer specification	268	28	200	**on request**

CE

Threaded Connection Bolt

Use

- For Verbinden two PH Female Bars
- Simply screw the bolts into the internal threads of both female bars

Your advantages

- Certified for use in earthquake zones (PH-MU – PH-K – PH-MU)
- High strength material
- General Building Authority Approval (abZ)
- European Technical Assessment (ETA)

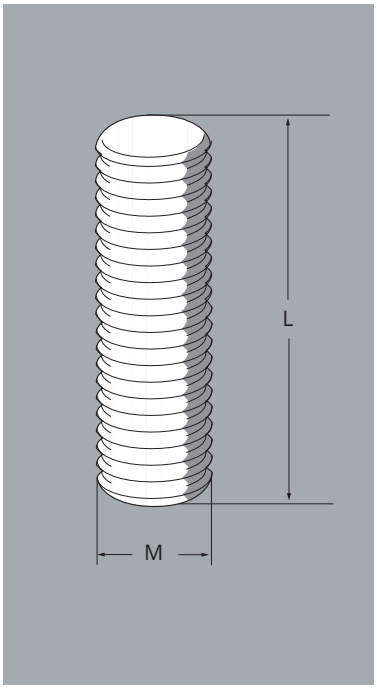

Threaded connection bolt – black steel

Ref. no.	Type	For d_s [mm]	Thread size	Dimension L [mm]	Packing unit [pieces]	Weight approx. [kg/100 pcs]	Price plus RTZ [EUR/pcs]
119263	**PH-K-8/30**	8	M 12	30	1	2.20	**1.93**
135169	**PH-K-10/34**	10	M 14	34	1	3.30	**2.15**
135170	**PH-K-12/40**	12	M 16	40	1	4.31	**2.82**
119264	**PH-K-14/45**	14	M 18	45	1	6.03	**3.30**
119265	**PH-K-16/50**	16	M 20	50	1	8.65	**3.85**
119266	**PH-K-20/65**	20	M 24	65	1	16.62	**5.40**
119267	**PH-K-25/80**	25	M 30	80	1	33.03	**11.60**
119268	**PH-K-28/85**	28	M 36	85	1	57.72	**15.95**
135171	**PH-K-32/106**	32	M 42	106	1	100.00	**20.00**
149216	**PH-K-40/145**	40	M 52	145	1	200.00	**51.40**

Coupling Socket

Use

- For Verbinden two PH Male Bars
- Simply screw male bars into the coupling socket from both sides

Your advantages

- Highest dynamic resistances
- High strength material
- General Building Authority Approval (abZ)
- European Technical Assessment (ETA)

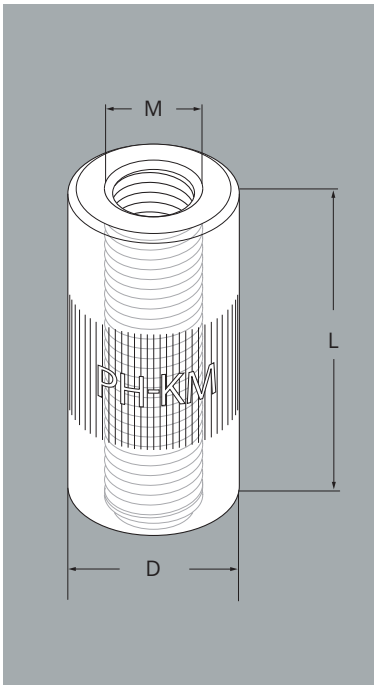

Coupling socket – black steel

Ref. no.	Type	For	Thread size	Dimensions		Packing unit	Weight approx.	Price plus RTZ
		d_s [mm]		D [mm]	L [mm]	[pieces]	[kg/100 pcs]	[EUR/pcs]
363511	**PH-KM-12**	12	M 16	22.3	45	1	7.50	**6.60**
363512	**PH-KM-14**	14	M 18	25.5	52	1	11.50	**6.90**
363513	**PH-KM-16**	16	M 20	28.8	58	1	17.00	**7.50**
363514	**PH-KM-20**	20	M 24	35.3	73	1	30.00	**12.40**
363515	**PH-KM-25**	25	M 30	44.1	88	1	57.00	**14.50**
363516	**PH-KM-28**	28	M 36	51.0	90	1	78.00	**17.30**
363517	**PH-KM-32**	32	M 42	55.8	111	1	100.00	**22.10**

Right-Left-Thread Connect Bolt

Use

- For Connect angled PH Female Bars
- If angled female bars are placed next to each other, it is not possible to turn the bars freely. The components can still be screwed together due to the counter-rotating threads of the Verbinden bolt

Your advantages

- Innovative connection even in the case of complicated reinforcement layout
- High strength material
- General Building Authority Approval (abZ)
- European Technical Assessment (ETA)

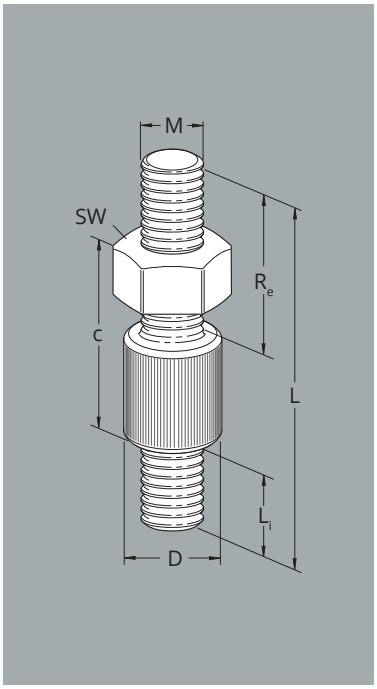

Right-left-thread Verbinden bolt – black steel

Ref. no.	Type	For	Thread size	Dimensions						Packing unit	Weight approx.	Price plus RTZ
		d_s [mm]		D [mm]	L [mm]	R_e [mm]	L_i [mm]	c [mm]	SW [mm]	[pieces]	[kg/100 pcs]	[EUR/pcs]
119269	**PH-RL-8/61**	8	M 12	16.5	61	24	12	37	19	1	8.00	**14.10**
135172	**PH-RL-10/71**	10	M 14	18.5	71	30	16	39	22	1	11.00	**15.20**
135173	**PH-RL-12/79**	12	M 16	20.5	79	35	19	41	24	1	14.00	**15.45**
119270	**PH-RL-14/85**	14	M 18	24.0	85	39	21	43	27	1	20.00	**15.65**
119271	**PH-RL-16/90**	16	M 20	27.0	90	42	23	44	30	1	27.00	**16.50**
119272	**PH-RL-20/109**	20	M 24	33.5	109	53	31	47	36	1	46.00	**18.20**
119273	**PH-RL-25/131**	25	M 30	42.0	131	67	39	53	46	1	85.00	**25.65**
119274	**PH-RL-28/145**	28	M 36	48.5	145	74	41	63	55	1	132.00	**28.95**
135174	**PH-RL-32/170**	32	M 42	50.5	170	90	50	70	65	1	235.00	**47.10**

Reducing Bolt

Use

- For Verbinden two PH Female Bars of different diameters
- Use for ascending bolted reinforcement over several floors, where the statically necessary cross-sections are reduced floor by floor

Your advantages

- Economical grading of reinforcement cross-sections
- High strength material
- General Building Authority Approval (abZ)
- European Technical Assessment (ETA)

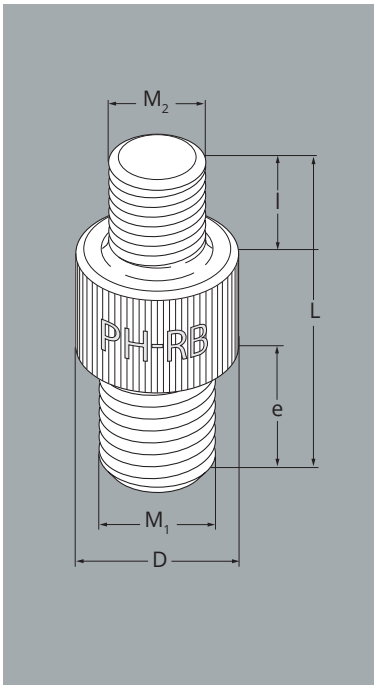

Reducing bolt – black steel

Ref. no.	Type	For	For	Thread sizen		Dimensions				Packing unit	Weight approx.	Price plus RTZ
		d_{s1} [mm]	d_{s2} [mm]	M_1	M_2	e [mm]	l [mm]	L [mm]	D [mm]	[pieces]	[kg/100 pcs]	[EUR/pcs]
211277	**PH-RB-12/10**	12	10	M 16	M 14	19	16	60	20.5	1	10.20	**11.35**
211278	**PH-RB-14/12**	14	12	M 18	M 16	21	19	65	24.0	1	14.70	**12.90**
211285	**PH-RB-16/12**	16	12	M 20	M 16	23	19	67	27.0	1	18.50	**15.00**
211279	**PH-RB-16/14**	16	14	M 20	M 18	23	21	69	27.0	1	19.40	**15.00**
211280	**PH-RB-20/16**	20	16	M 24	M 20	31	23	79	33.5	1	31.30	**18.30**
211281	**PH-RB-25/20**	25	20	M 30	M 24	39	31	95	42.0	1	54.30	**27.40**
211286	**PH-RB-28/20**	28	20	M 36	M 24	41	31	102	48.5	1	80.60	**35.40**
211282	**PH-RB-28/25**	28	25	M 36	M 30	41	39	110	48.5	1	89.60	**37.10**
211287	**PH-RB-32/25**	32	25	M 42	M 30	50	39	119	50.5	1	110.90	**45.30**
211283	**PH-RB-32/28**	32	28	M 42	M 36	50	41	121	50.5	1	120.70	**46.20**
211284	**PH-RB-40/32**	40	32	M 52	M 42	70	50	160	70.5	1	270.00	**65.80**

Reducing Socket

Use

- For Verbinden two PH Male Bars with different diameters
- Use for ascending bolted reinforcement over several floors, where the statically necessary cross-sections are reduced floor by floor

Your advantages

- Economical grading of reinforcement cross-sections
- High strength material
- General Building Authority Approval (abZ)
- European Technical Assessment (ETA)

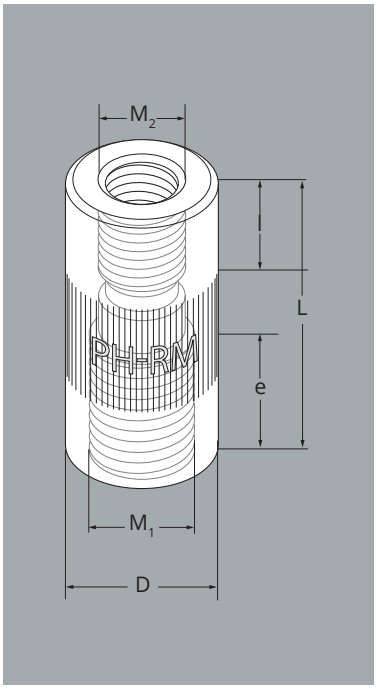

Reducing socket – black steel

Ref. no.	Type	For	For	Thread sizen		Dimensions				Packing unit	Weight approx.	Price plus RTZ
		d_{s1} [mm]	d_{s2} [mm]	M_1	M_2	e [mm]	l [mm]	L [mm]	D [mm]	[pieces]	[kg/100 pcs]	[EUR/pcs]
211288	**PH-RM-12/10**	12	10	M 16	M 14	20	17	50	22	1	8.60	**7.75**
211289	**PH-RM-14/12**	14	12	M 18	M 16	22	20	55	25	1	12.20	**8.65**
211296	**PH-RM-16/12**	16	12	M 20	M 16	24	20	60	30	1	22.20	**9.90**
211290	**PH-RM-16/14**	16	14	M 20	M 18	24	22	60	30	1	21.20	**9.90**
211291	**PH-RM-20/16**	20	16	M 24	M 20	32	24	75	35	1	36.10	**12.25**
211292	**PH-RM-25/20**	25	20	M 30	M 24	40	32	90	45	1	74.50	**17.00**
211297	**PH-RM-28/20**	28	20	M 36	M 24	42	32	95	50	1	94.70	**22.40**
211293	**PH-RM-28/25**	28	25	M 36	M 30	42	40	105	50	1	97.50	**24.10**
211298	**PH-RM-32/25**	32	25	M 42	M 30	52	40	115	55	1	126.00	**30.70**
211294	**PH-RM-32/28**	32	28	M 42	M 36	52	42	115	55	1	116.00	**32.00**

Positioning Connector

Use

- For Verbinden PH Female and Male Bars that are not freely rotatable Continuous adjustment of the installation length possible.
- Fixation by lock nut

Your advantages

- Flexibility supplied by practice-orientated tolerance ranges
- High strength material
- General Building Authority Approval (abZ)
- European Technical Assessment (ETA)

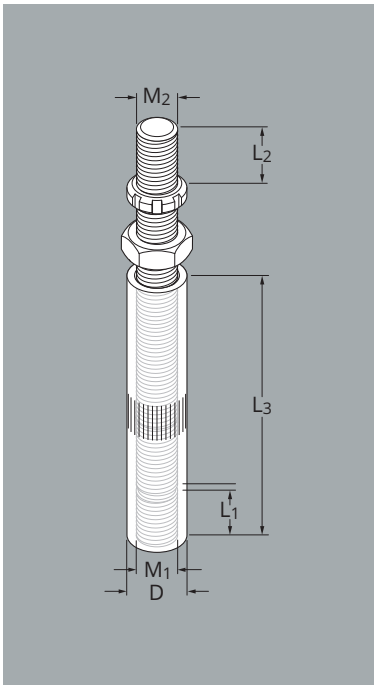

Positioning connector – black steel

Ref. no.	Type	For	Thread sizen		Dimensions					Packing unit	Weight approx.	Price plus RTZ
		d_s [mm]	M_1	M_2	D [mm]	L_1 [mm]	L_2 [mm]	L_3 [mm]	l [mm]	[pieces]	[kg/100 pcs]	[EUR/pcs]
211299	**PH-PA-12**	12	M 16	M 16	22.3	20	30	120	20	1	40.00	**34.50**
211300	**PH-PA-14**	14	M 18	M 18	25.5	22	32	128	22	1	60.00	**44.10**
211301	**PH-PA-16**	16	M 20	M 20	28.8	24	34	136	24	1	80.00	**51.70**
211302	**PH-PA-20**	20	M 24	M 24	35.3	32	42	188	32	1	150.00	**75.20**
211303	**PH-PA-25**	25	M 30	M 30	44.1	40	50	222	40	1	280.00	**118.50**
211304	**PH-PA-28**	28	M 36	M 36	51.0	42	52	230	42	1	394.00	**147.50**
211305	**PH-PA-32**	32	M 42	M 42	55.8	52	62	278	52	1	560.00	**227.00**
211306	**PH-PA-40**	40	M 20	M 20	70.0	70	80	350	70	1	1090.00	**on request**

Welding Socket

Use

- For the connection of reinforcement screw connections and steel construction elements
- The socket is welded onto the steel component, into which a PH Male Bar or coupling/reducing element can be screwed
- Side of the weld seam without thread, opposite side with defined screw-in depth for PH components

Your advantages

- Easily welded material
- General Building Authority Approval (abZ)
- European Technical Assessment (ETA)

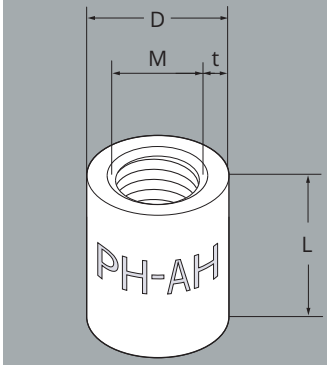

Welding socket – black steel

Ref. no.	Type	For	Thread size	Dimensions			Packing unit	Weight approx.	Price plus RTZ
		d_s [mm]		L [mm]	D [mm]	t [mm]	[pieces]	[kg/100 pcs]	[EUR/pcs]
211307	**PH-AH-12**	12	M 16	35	25	5.50	1	8.80	**23.05**
211308	**PH-AH-14**	14	M 18	40	27	5.75	1	11.50	**27.60**
211309	**PH-AH-16**	16	M 20	40	30	6.25	1	14.00	**33.50**
211310	**PH-AH-20**	20	M 24	50	40	9.50	1	34.70	**37.30**
211311	**PH-AH-25**	25	M 30	60	50	11.75	1	64.70	**41.70**
211312	**PH-AH-28**	28	M 36	65	55	11.50	1	77.50	**46.00**
211313	**PH-AH-32**	32	M 42	75	60	11.25	1	97.40	**50.10**
211314	**PH-AH-40**	40	M 52	90	75	14.00	1	181.00	**59.70**

End Anchoring Plate

Use

- To create an end anchorage for the reinforcement
- The end anchoring plate is used in combination with PH Male Bars
- The products are simply screwed together using the internal thread of the plate.
- This allows loads from a PH screw connection or an overlapping joint can be introduced into the component

Your advantages

- Creation of a standard end anchorage according to DIN EN 1992-1-1
- Dynamic loads possible
- General Building Authority Approval (abZ)

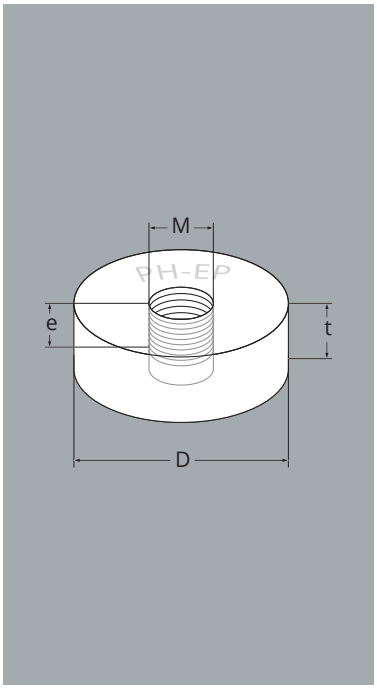

End anchoring plate – black steel

Ref. no.	Type	For	Thread size	Dimensions			Packing unit	Weight approx.	Price plus RTZ
		d_s [mm]		e [mm]	D [mm]	t [mm]	[pieces]	[kg/100 pcs]	[EUR/pcs]
218365	**PH-EP-12**	12	M 16	16	45	19	1	20.50	**17.00**
218366	**PH-EP-14**	14	M 18	18	55	21	1	35.20	**17.90**
218367	**PH-EP-16**	16	M 20	20	60	23	1	45.50	**20.65**
218368	**PH-EP-20**	20	M 24	24	75	27	1	85.60	**24.50**
218369	**PH-EP-25**	25	M 30	30	95	33	1	167.80	**28.55**
218370	**PH-EP-28**	28	M 36	36	105	39	1	266.00	**34.60**

CE

Torque wrench

Use

- Tightening of connections of the PH system and er a controlled torque in accordance with the approval

Your advantages

- Controlled, approval-compliant torque
- Self-locking toothed jaws
- Large torque range from 40 to 200 Nm

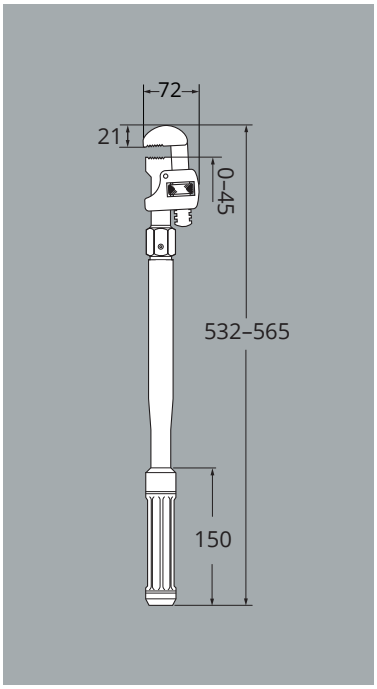

Torque wrench – for reinforcement screw connections – tool steel

Ref. no.	Type	For Size	Packing unit	Weight approx.	Price plus RTZ
			[pieces]	[kg/100 pcs]	[EUR/pcs]
219272	**DZ-14–40**	bar diameter 14 mm bis 40 mm	1	230.00	**362.00**

Mounting torque MT torque wrench

For type	M_T
PH-8	20
PH-10	25
PH-12	30
PH-14	40
PH-16	60
PH-20	80
PH-25	100
PH-28	140
PH-32	180
PH-40	200

area of application torque pliers

Nail Disc and PH Nail Disc

Use

- For formwork fixing of PH Female Bars
- Also protects the internal thread of the sockets from dirt and damage

Your advantages

- Flexible formwork fixing – gluing, nailing, screwing
- Colour-coded nail disc for quick assignment of the system size

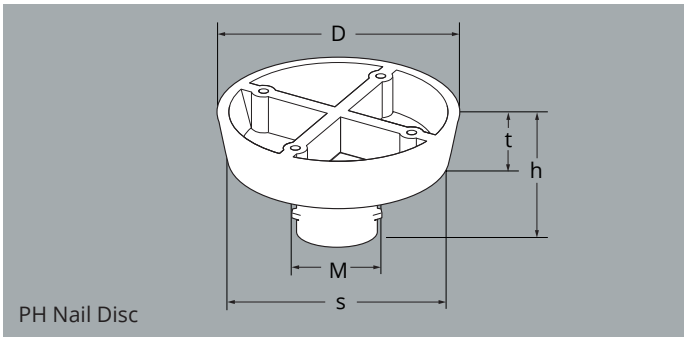

PH Nail Disc

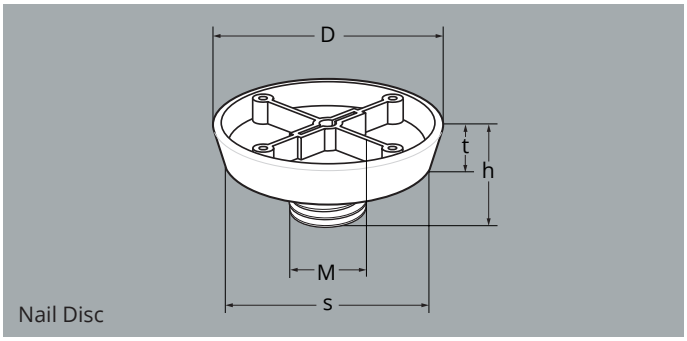

Nail Disc

PH Nail Disc – plastic

Ref. no.	Type	Colour coding	For	Thread size	Dimensions				Packing unit	Weight approx.	Price plus RTZ
			d_s [mm]		D [mm]	s [mm]	h [mm]	t [mm]	[pieces]	[kg/100 pcs]	[EUR/100 pcs]
118515	**PH-ST-8**	black	8	M 12	55	45	18	8	1	0.77	**34.30**
118516	**PH-ST-12**	yellow	12	M 16	55	45	18	8	1	0.79	**34.90**
118517	**PH-ST-14**	blue	14	M 18	55	45	18	8	1	0.81	**35.20**
118518	**PH-ST-16**	white	16	M 20	55	45	20	8	1	0.83	**35.80**
118519	**PH-ST-20**	grey	20	M 24	80	70	20	8	1	1.29	**44.10**
118520	**PH-ST-25**	red	25	M 30	80	70	23	8	1	1.35	**46.20**
118521	**PH-ST-28**	black	28	M 36	80	70	25	8	1	1.44	**49.00**

Nail Disc – plastic

Ref. no.	Type	For	Thread size	Dimensions				Packing unit	Weight approx.	Price plus RTZ
		d_s [mm]		D [mm]	s [mm]	t [mm]	e [mm]	[pieces]	[kg/100 pcs]	[EUR/100 pcs]
391648	**NT-14**	10	M 14	59.0	55.5	10	10	200	0.55	**35.50**
391655	**NT-42**	32	M 42	67.5	63.0	13	20	50	5.17	**104.00**
391656	**NT-52**	40	M 52	81.0	76.0	13	20	50	6.50	**125.00**

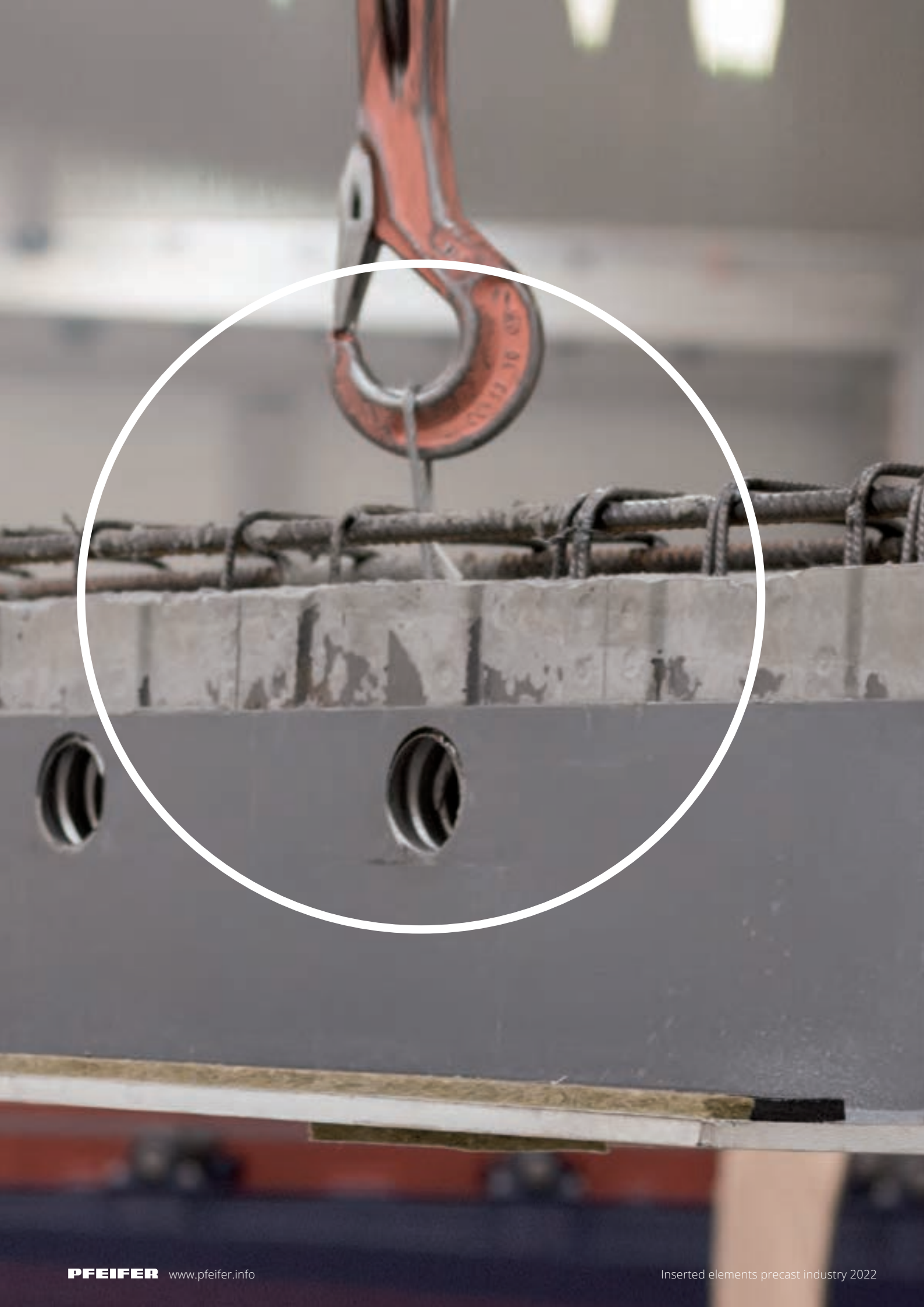

Slim floor construc-tions

Hybridbeam® p. 314

PFEIFER offers the innovative Hybridbeam® compo-site beam for creating so-called slim-floor constructions economically. Slim-floor constructions are optimised slab constructions that can be used to achieve an unheard-of increase in efficiency in terms of building use. All structu-rally relevant elements are placed within the slab cross-section of the extremely slim design. There are different variants of the Hybridbeam® which are used as static load-bearing, slab-level supporting beams made of a composite of the most advanced high-performance materials.
This gives both the client and the architect a clear view of the underside of the ceiling with extreme design freedom and no interfering cross-sections.

Replacement beam p. 318

The BHRW Replacement Beam is intended for the manufacture of ceiling openings in prestressed precast ceilings. As standard, BHRW Replacement Beams have elastomeric bearings to support ceiling slabs.
The replacement beams are suspended between two parallel prestressed hollow concrete slabs.
The products can also be used in alternative applications after prior static test.

Hybridbeam®

The Hybridbeam® serves as a centre or edge beam in the ceiling slab to support ceiling slabs on both sides. It enables immediate slab assembly once the beams are in position on walls or columns. Penetrations on the beam-side walls are used to connect the slab to transverse reinforcement. Vent holes in the beam allow air to escape when it is connected to the ceiling slab and cast.

Your advantages

- Economic due to optimised building use
- Flexibility offered by smooth slab and erside and free space for installations
- Efficiency achieved by high carrying capacity

More information can be found at
www.pfeifer.info/hybridbeam-cls

Hybridbeam®

Hybridbeam® BHM 316
Hybridbeam® BHR. 317

Direct contact for inquiries
and orders:
hybridbeam@pfeifer.de

Hybridbeam® BHM

Use

- Central beam supporting floor slabs on both sides
- It enables immediate slab installation once the beams are in position on walls or columns
- Penetrations on the beam-side walls are used to connect the slab to transverse reinforcement

Your advantages

- Economic due to optimised building use – low floor height
- Efficiency achieved by high carrying capacity
- Fast assembly process without supports
- Flexibility offered by smooth slab and erside and free space for installations
- Can be used in a variety of different ceiling/floor constructions
- Safety guaranteed by country-specific approvals and certificates
- High torsional and bending stiffness achieved during assembly
- Minimal deflection in the use phase

Building recommendation

- ✓ Frame construction
- ✓ Parking garage/garage
- ✓ Office building
- ✓ High-rise building

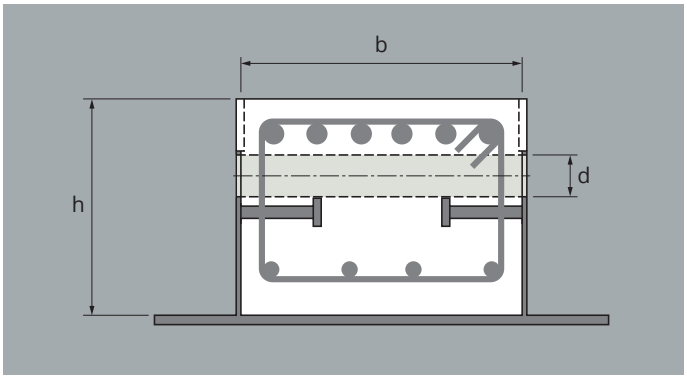

Hybridbeam® BHM – steel-concrete composite

Ref. no.	Type	Dimensions				Packing unit	Price plus RTZ
		h [mm]	b [mm]	Länge [mm]	d [mm]	[pieces]	[EUR/pcs]
320461	BHM-20-200	200	200	Customer specification	50	1	on request
320462	BHM-20-250	200	250	Customer specification	50	1	on request
320463	BHM-20-300	200	300	Customer specification	50	1	on request
320464	BHM-27-300	270	300	Customer specification	60	1	on request
320465	BHM-27-350	270	350	Customer specification	60	1	on request
320466	BHM-27-400	270	400	Customer specification	60	1	on request
320467	BHM-32-350	320	350	Customer specification	60	1	on request
320468	BHM-32-400	320	400	Customer specification	60	1	on request
320469	BHM-32-450	320	450	Customer specification	60	1	on request
320470	BHM-40-400	400	400	Customer specification	60	1	on request
320471	BHM-40-450	400	450	Customer specification	60	1	on request
320472	BHM-40-500	400	500	Customer specification	60	1	on request
320473	BHM-45-400	450	400	Customer specification	60	1	on request
320474	BHM-45-450	450	450	Customer specification	60	1	on request
320475	BHM-45-500	450	500	Customer specification	60	1	on request
320476	BHM-50-500	500	500	Customer specification	60	1	on request
320477	BHM-50-550	500	550	Customer specification	60	1	on request
320478	BHM-50-650	500	650	Customer specification	60	1	on request

Hybridbeam® BHR

Use

- Edge beam with a slab supported on one side
- Vent holes in the beam allow air to escape when it is connected to the ceiling slab and cast.
- It enables immediate slab installation once the beams are in position on walls or columns

Your advantages

- Economic due to optimised building use – low floor height
- Efficiency achieved by high carrying capacity
- Fast assembly process without supports
- Flexibility offered by smooth slab and erside and free space for installations
- Can be used in a variety of different ceiling/floor constructions
- Safety guaranteed by country-specific approvals and certificates
- High torsional and bending stiffness achieved during assembly
- No edge formwork required

Building recommendation

- ✓ Frame construction
- ✓ Parking garage/garage
- ✓ Office building
- ✓ High-rise building

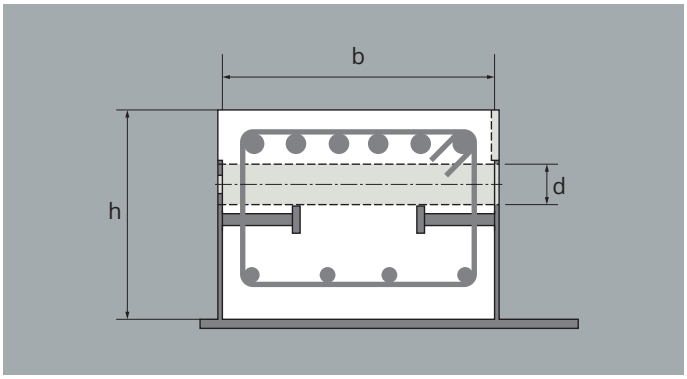

Hybridbeam® BHR – steel-concrete composite

Ref. no.	Type	Dimensions				Packing unit	Price plus RTZ
		h [mm]	b [mm]	Länge [mm]	d [mm]	[pieces]	[EUR/pcs]
320479	**BHR-20-200**	200	200	Customer specification	50	1	**on request**
320480	**BHR-20-250**	200	250	Customer specification	50	1	**on request**
320481	**BHR-20-300**	200	300	Customer specification	50	1	**on request**
320482	**BHR-27-300**	270	300	Customer specification	60	1	**on request**
320483	**BHR-27-350**	270	350	Customer specification	60	1	**on request**
320484	**BHR-27-400**	270	400	Customer specification	60	1	**on request**
320485	**BHR-32-350**	320	350	Customer specification	60	1	**on request**
320486	**BHR-32-400**	320	400	Customer specification	60	1	**on request**
320487	**BHR-32-450**	320	450	Customer specification	60	1	**on request**
320488	**BHR-40-400**	400	400	Customer specification	60	1	**on request**
320489	**BHR-40-450**	400	450	Customer specification	60	1	**on request**
320490	**BHR-40-500**	400	500	Customer specification	60	1	**on request**
320491	**BHR-45-400**	450	400	Customer specification	60	1	**on request**
320492	**BHR-45-450**	450	450	Customer specification	60	1	**on request**
320493	**BHR-45-500**	450	500	Customer specification	60	1	**on request**
320494	**BHR-50-500**	500	500	Customer specification	60	1	**on request**
320495	**BHR-50-550**	500	550	Customer specification	60	1	**on request**
320496	**BHR-50-650**	500	650	Customer specification	60	1	**on request**

Replacement Beam

The BHRW Replacement Beam is intended for the production of openings in precast, prestressed concrete slabs. As standard, BHRW Replacement Beams have elastomeric bearings to support ceiling slabs. The replacement beams are suspended between two parallel prestressed hollow concrete slabs. The products can also be used in alternative applications after prior static test.

Your advantages

- Effective solution for the support of floor slabs
- Production of replacements in special variants possible
- Universal use by simply hooking between adjacent plate edges

More information can be found at
www.pfeifer.info/replacement-beam

Replacement Beam

Change Bar

BHRW Replacement Beam short 320
BHRW Replacement Beam long 321

Direct contact for inquiries and orders:
hybridbeam@pfeifer.de

BHRW Replacement Beam short

Use

- For the simple creation of openings in pre-stressed concrete precast slabs
- The replacement beams are suspended between two parallel prestressed hollow concrete slabs and thus ensure separation from the slab opening.
- Elastomeric bearings along the length of the replacement beam enable the support of floor slabs.
- A prior static test is required for alternative applications

Your advantages

- Reliable support of slabs in areas of recesses for installations
- Effective solution for the support of floor slabs
- Custom variants can be provided for individual slab constructions
- Universal use by simply hooking between adjacent plate edges
- Complete transfer of torsional force without further support measures during assembly
- Products certified according to ISO 9001:2015, EN 1090-2 and ISO 3834
- Delivery including the Verbinden reinforcement PH-A 12 L = 800 mm
- Lifting anchors for easy handling of the beams, already installed

Building recommendation

✓ Frame construction ✓ Parking garage/garage ✓ Office building ✓ High-rise building

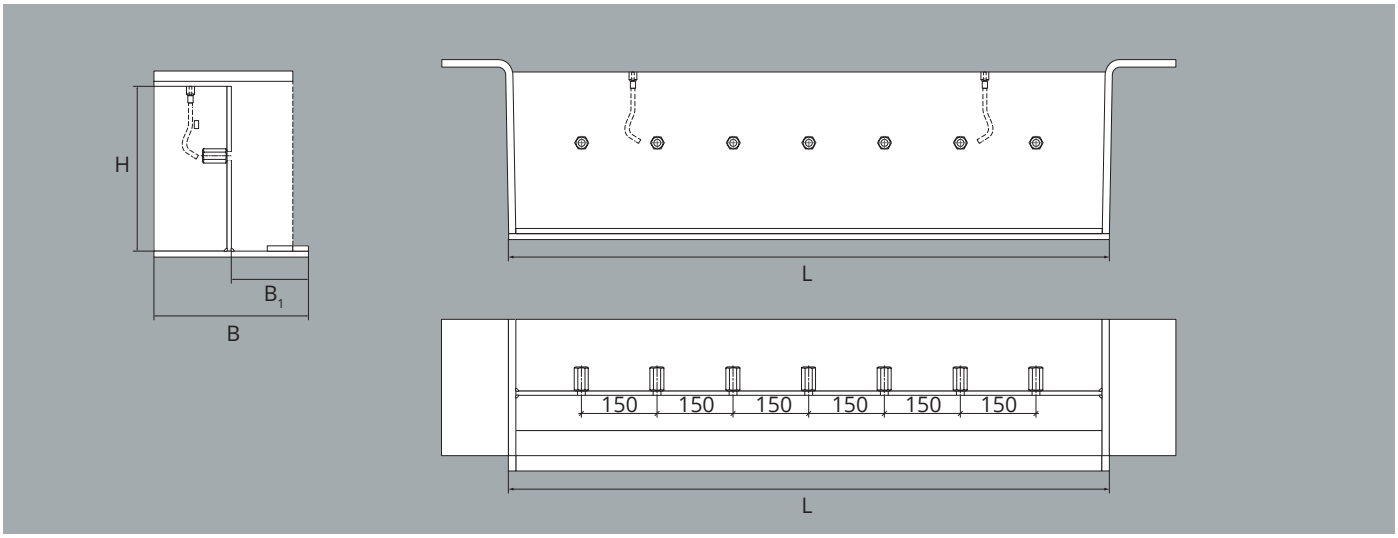

BHRW Replacement Beam short – steel-concrete composite

Ref. no.	Type	Dimensions				Packing unit	Price plus RTZ
		H [mm]	B [mm]	B_1 [mm]	L [mm]	[pieces]	[EUR/pcs]
412147	**BHRW-20-150-1190**	200	300	150	1190	1	**on request**
412149	**BHRW-25-150-1190**	250	300	150	1190	1	**on request**
412150	**BHRW-27-150-1190**	270	300	150	1190	1	**on request**
412151	**BHRW-32-150-1190**	320	300	150	1190	1	**on request**
412152	**BHRW-40-150-1190**	400	300	150	1190	1	**on request**
412153	**BHRW-50-150-1190**	500	300	150	1190	1	**on request**

BHRW Replacement Beam long

Use

- For the simple creation of openings in pre-stressed concrete precast slabs
- The replacement beams are suspended between two parallel prestressed hollow concrete slabs and thus ensure separation from the slab opening.
- Elastomeric bearings along the length of the replacement beam enable the support of floor slabs.
- A prior static test is required for alternative applications

Your advantages

- Reliable support of slabs in areas of recesses for installations
- Effective solution for the support of floor slabs
- Custom variants can be provided for individual slab constructions
- Universal use by simply hooking between adjacent plate edges
- Complete transfer of torsional force without further support measures during assembly
- Products certified according to ISO 9001:2015, EN 1090-2 and ISO 3834
- Delivery including the Verbinden reinforcement PH-A 12 L = 800 mm
- Lifting anchors for easy handling of the beams, already installed

Building recommendation

✓ Frame construction ✓ Parking garage/garage ✓ Office building ✓ High-rise building

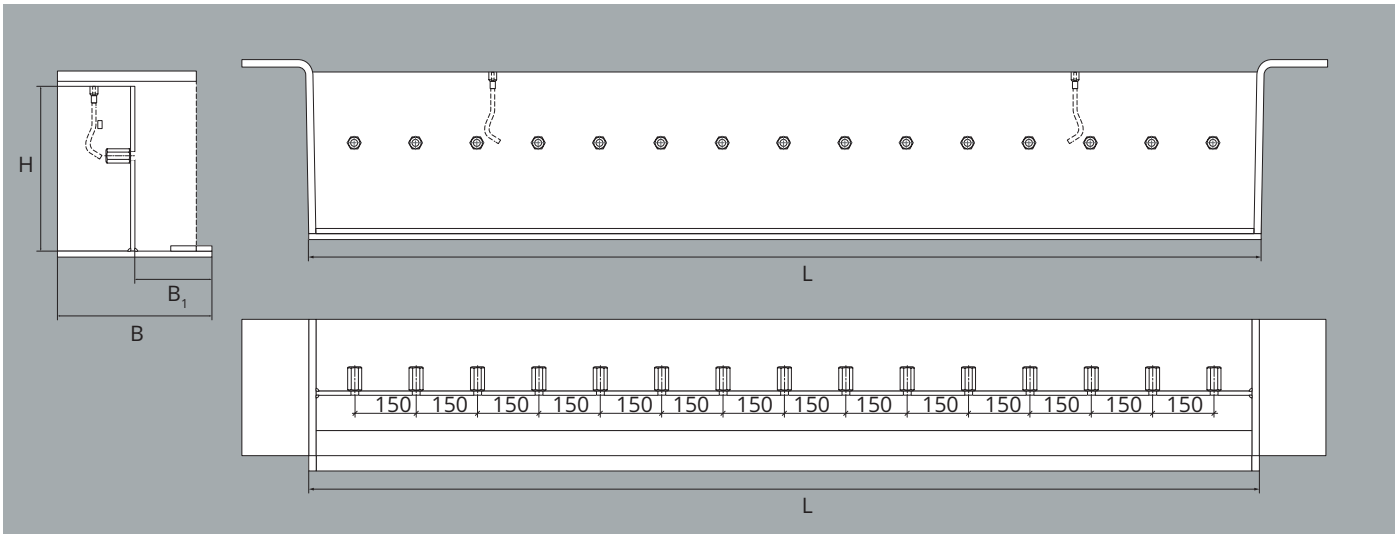

BHRW Replacement Beam short – steel-concrete composite

Ref. no.	Type	Dimensions				Packing unit	Price plus RTZ
		H [mm]	B [mm]	B_1 [mm]	L [mm]	[pieces]	[EUR/pcs]
412154	**BHRW-20-150-2390**	200	300	150	2390	1	**on request**
412155	**BHRW-25-150-2390**	250	300	150	2390	1	**on request**
412156	**BHRW-27-150-2390**	270	300	150	2390	1	**on request**
412157	**BHRW-32-150-2390**	320	300	150	2390	1	**on request**
412158	**BHRW-40-150-2390**	400	300	150	2390	1	**on request**
412159	**BHRW-50-150-2390**	500	300	150	2390	1	**on request**

Technical seminars

Competent, experienced and solution oriented

In our tried and tested technical seminars, qualified and experienced speakers will teach you not only the latest standards but also everything worth knowing from the theory and practice of construction. Our seminars keep your knowledge up to date and ensure sustainable success for you and your employees. Why not also make use of our on-site technical seminars and instructions, with contents that we tailor especially to suit your applications, loads and products?

More detailed information and dates, go to:

www.pfeifer.info/technical-seminars-cls

We are happy to help!
fachseminar@pfeifer.de
Tel. +49 (0) 83 31-937-112

Technical seminar on the safe use of lifting anchor systems

Target group

Foremen, site installation supervisors, employees for operations scheduling, concrete workers, shop floor workers, loading

Info

This seminar is a shortened version of the seminar on fundamentals for teaching the basics to become a competent person (expert) for lifting anchor systems. Taken on its own it is not sufficient for the appointment as a qualified person by the entrepreneur.

Seminar objective

The seminar teaches the basic principles of the selection of the appropriate lifting anchor system for the different precast concrete elements and assessment of safe handling.

Seminar objective

- The seminar teaches the basic principles of the selection of the appropriate lifting anchor system for the different precast concrete elements and assessment of safe handling.
- Seminar contents
- Static basics for lifting anchors
- Dimensioning of lifting anchors
- Application areas of the different types of lifting anchors
- Safety and legal regulations
- Inspection of the load lifting attachments
- Test specifications and discard criteria
- Lifting anchors in combination with attachment device

Technical seminar on teaching the principles to become a competent person (expert) for lifting anchor systems

Target group

Operations and production managers, foremen, site installation supervisors, employees for operations scheduling, specialists for work safety

Seminar objective

The seminar teaches the basic principles of the selection of the appropriate lifting anchor system for the different precast concrete elements, the assessment of safe handling and the monitoring of the load lifting attachments. Participants can be employed by the entrepreneur as a “qualified person” for the legally required execution of the test of the load lifting attachments, if they are qualified accordingly.

Seminar contents

- Static basics for lifting anchors
- Dimensioning of lifting anchors
- Application areas of the different types of lifting anchors
- Safety and legal regulations
- CE mark and VDI/BVBS directive
- Inspection of the load lifting attachments
- Test specifications and discard criteria
- Lifting anchors in combination with attachment device

PFEIFER Mobile Services. Back you up.

Employers are responsible for safety at the workplace – and for ensuring that all legal requirements for the safe use, storage, testing and discarding time of work equipment are complied with. We relieve you of this responsibility.
With tailor-made inspection service.

Our Inspection Service

Reminder of inspection dates
When purchasing, you decide whether we should remind you in good time of the regular inspection date.

Execution of the inspection
Our experienced employees carry out the legally required inspections using state-of-the-art machines.
Mobile on-site at your premises or at one of our numerous service centres.

Instant repairs
We repair most defects immediately using spare parts that we bring with us.
In the case of extensive repair work you will receive an estimate.

Spare parts service
For many products, we offer online spare parts lists that show at a glance what each part is called.
www.pfeifer.info/etl

Documentation of examination reporting and record-keeping
The product's examination reporting and record-keeping is visible to you and all service technicians across Europe.

Work equipment marking
For quick inspection and optimal documentation, we mark your products with numbers and colour markings – matching the technical specifications and the product.

Mobile at your premises, too!
Onsite for you: In the case of larger inspection actions, our mobile Inspection Service comes to your company so that your products are available to you for use again immediately.

Frequency Identification (RFID) marking
Transponders (tags) on the work equipment transmit the data of your work equipment without contact as soon as the test device is within range.

Well equipped
For example on the left: Mobile tensile test bench up to 10 t.
Right: Stationary tensile test bench up to 600 t in our test centres.

Get informed!
www.pfeifer.info/mobile-services

CAD library

**The CAD library includes all digital drawing files of PFEIFER concrete inserts in the most common formats.
Suitable file formats for modern Building Information Modelling (BIM) planning software are also available for free download.**

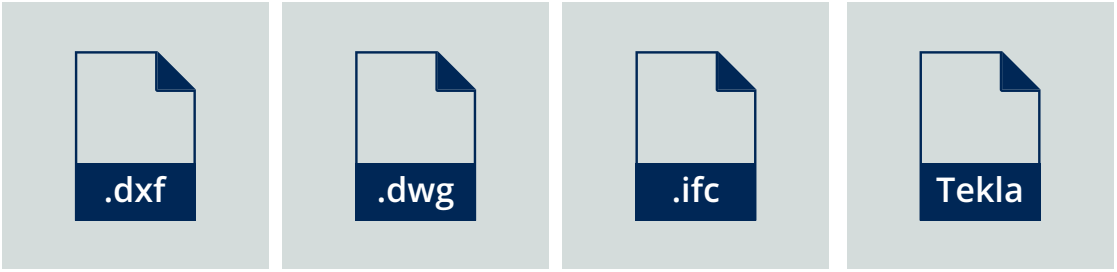

Download the CAD files now at:

www.pfeifer.info/cls-cad-library

Tender specification texts

Here we provide you with appropriate texts for tenders as a bulk file free of charge for the easy integration of PFEIFER concrete inserts into the specifications of your construction project.

Download the tender specification texts now at:

www.pfeifer.info/cls-tender-texts

References

PFEIFER sets standards. On construction sites, in mountainous regions, in industry, all over the world. Numerous reference projects show what makes our solutions and services so special. The following pages will give you an insight into selected reference projects where PFEIFER components were used.

Foto: © Roberto – adobe stock.com

GARDENS BY THE BAY, Singapur

Supplied products:
VS® system, thread system,
WK anchor system

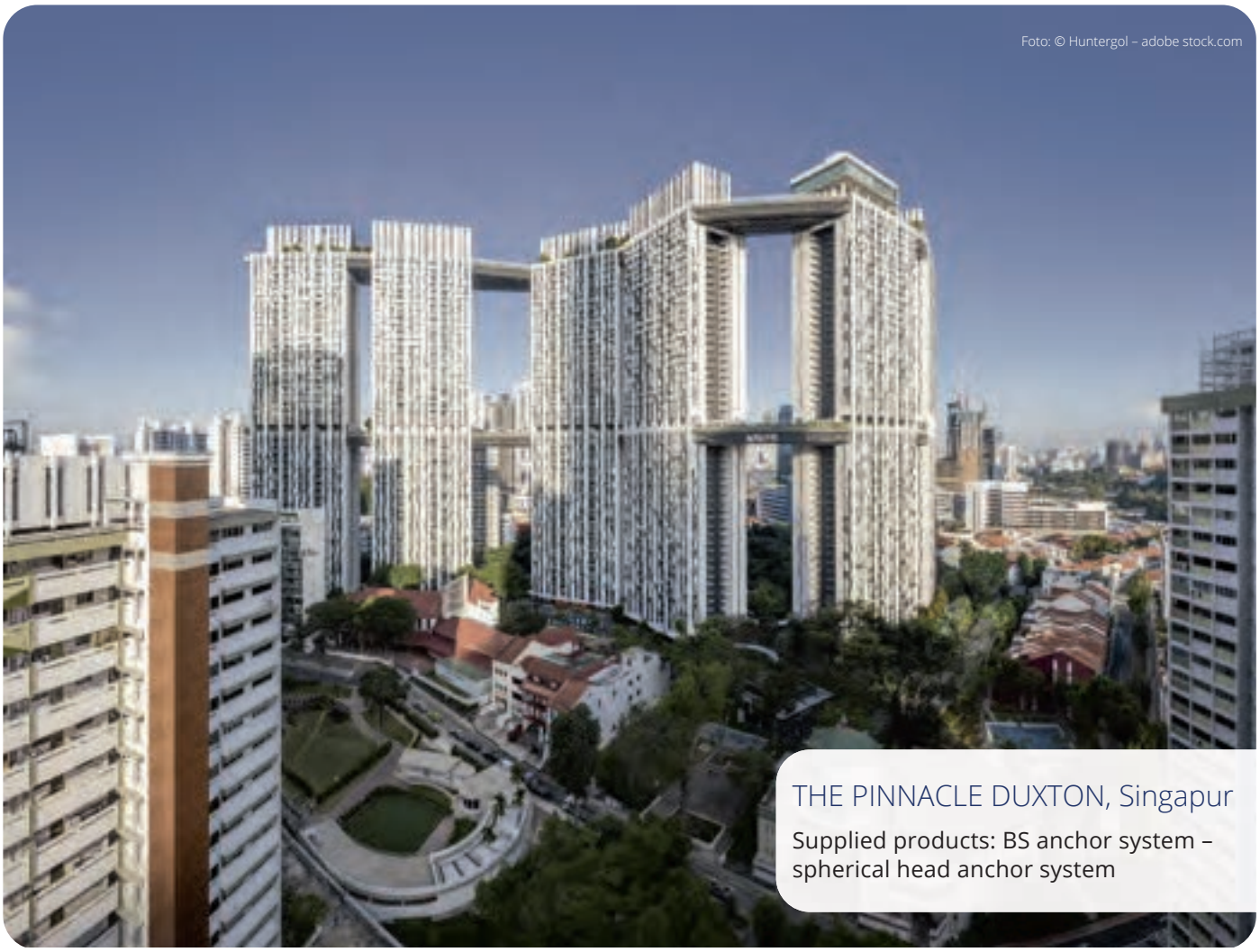

Foto: © Huntergol – adobe stock.com

THE PINNACLE DUXTON, Singapur

Supplied products: BS anchor system – spherical head anchor system

Foto: © Alberto Masnovo – adobe stock.com

ALLIANZ ARENA, Munich

Supplied products:
Thread system

HAMBURG STATE OPERA, Hamburg

Supplied products:
Column Shoe System

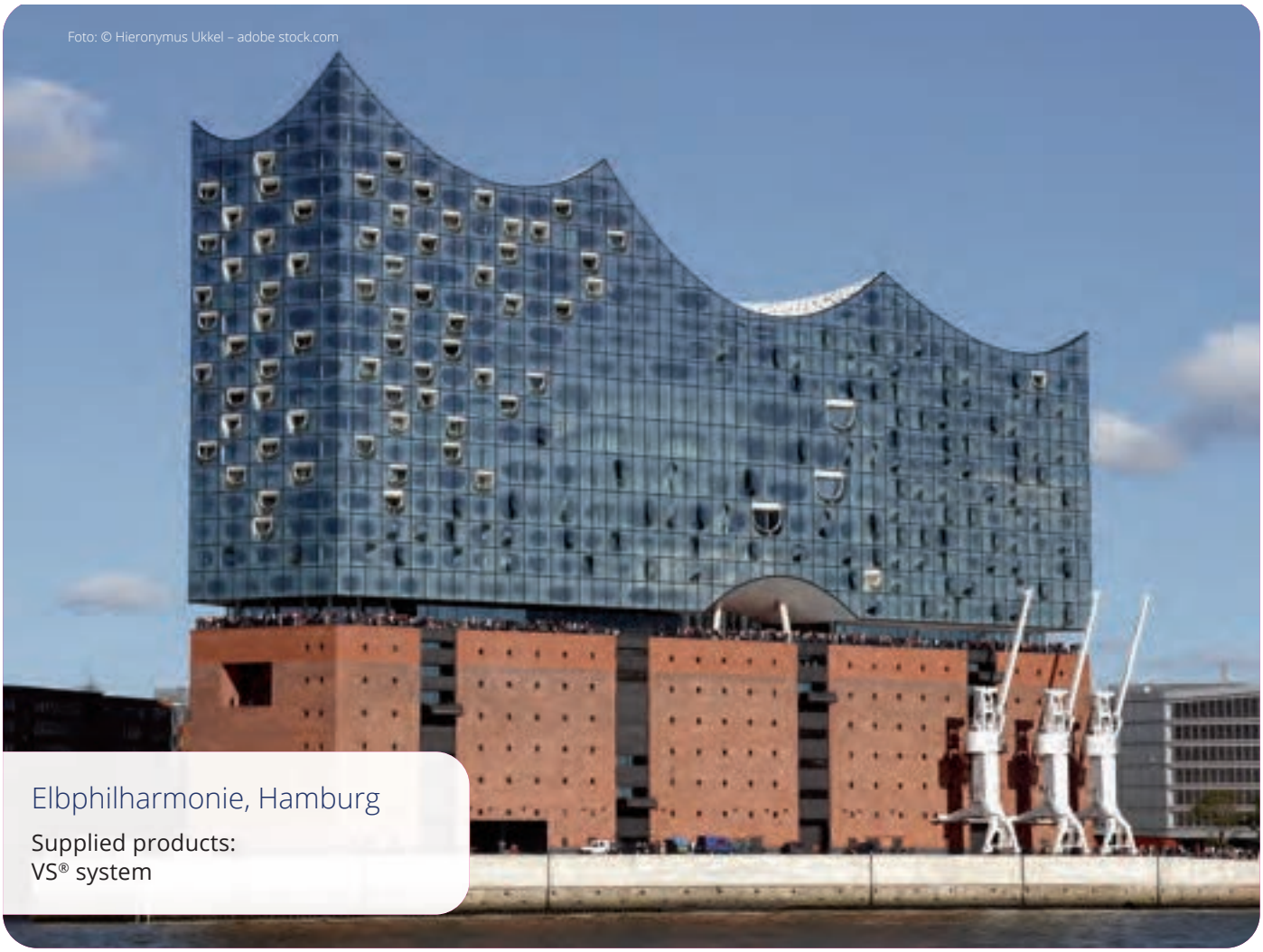

Foto: © Hieronymus Ukkel – adobe stock.com

Elbphilharmonie, Hamburg

Supplied products:
VS® system

PARKHAUS BERNAU, Bernau

Supplied products:
Hybridbeam®

TESLA GIGAFACTORY BERLIN-BRANDENBURG, Grünheide

Supplied products:
Steel bearing, VS® system, BS anchor system

PFEIFER Group::
Companies that move things.

Lift, secure, connect, move:
PFEIFER has been dealing with these topics for over 400 years.
Today, PFEIFER has three divisions with a total of ten business units.
Each a leader in their field, all united by a common attitude.
Whether you get to know us as a manufacturer, assembler, seller
or project manager:

We are your partner.

Professional. Thorough. Innovative.

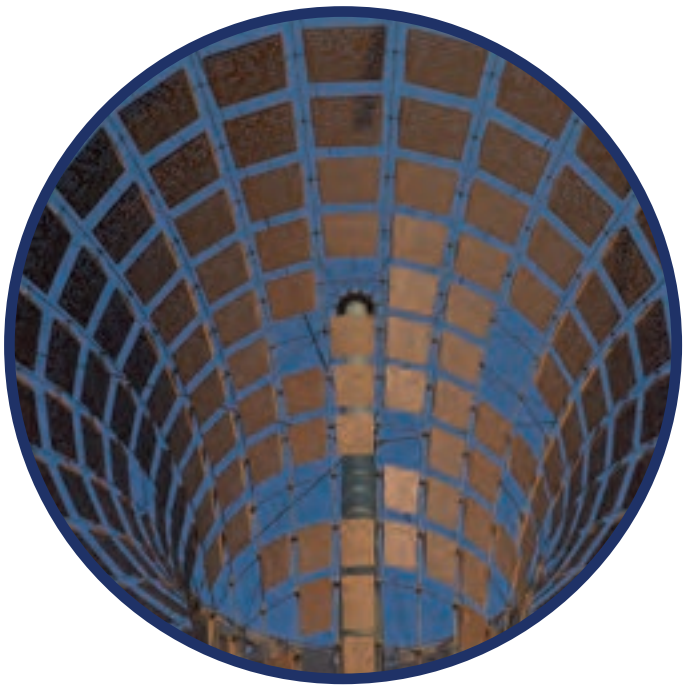

Structures

PFEIFER Structures is the world's leading partner for innovative lightweight structures such as building envelopes, façades, roofs and much more. As pioneers of lightweight architecture, we advise, deliver and install sophisticated projects in any material from steel and wood to membranes, glass or other materials.

Business units:
Lightweight Architecture, Cover Structures

Ropes & Services

As an innovative system provider, PFEIFER Ropes & Services combines over 200 years of experience in rope production, rope application technology and comprehensive services worldwide. As an original equipment manufacturer and supply chain partner of the world's largest construction machinery and elevator manufacturers, we supply well-known customers with products and services in the rope sector. With our application knowledge of the rope and its requirements in different areas of application, we offer safe standard and highly specific individual solutions for construction machinery and elevators, industrial plants and the maritime industry.
We also support you through our worldwide network of rope experts in consulting, technical implementation and all repair and maintenance measures.

Business units:
Industrial Ropes, Elevator Products

Lifting

PFEIFER offers standard and sophisticated special solutions worldwide for the efficient and safe movement and connection of precast concrete elements, loads and goods of all kinds. As a partner, we support you with individual project concepts, excellent inspection services and practical specialist seminars. As an expert in protective systems made of high-strength wire and rope nets, we also develop customer-specific protective nets and barriers for the prevention of natural hazards and other safety risks. In addition, PFEIFER has for many years been your reliable, international partner for high-quality tension member systems for architecture and construction projects of all kinds.

Business units:
Building Systems, Attachment and Lashing Equipment, Lifting Technology, Mobile Services, Protective Structures, Tension Members

Dimensioning software

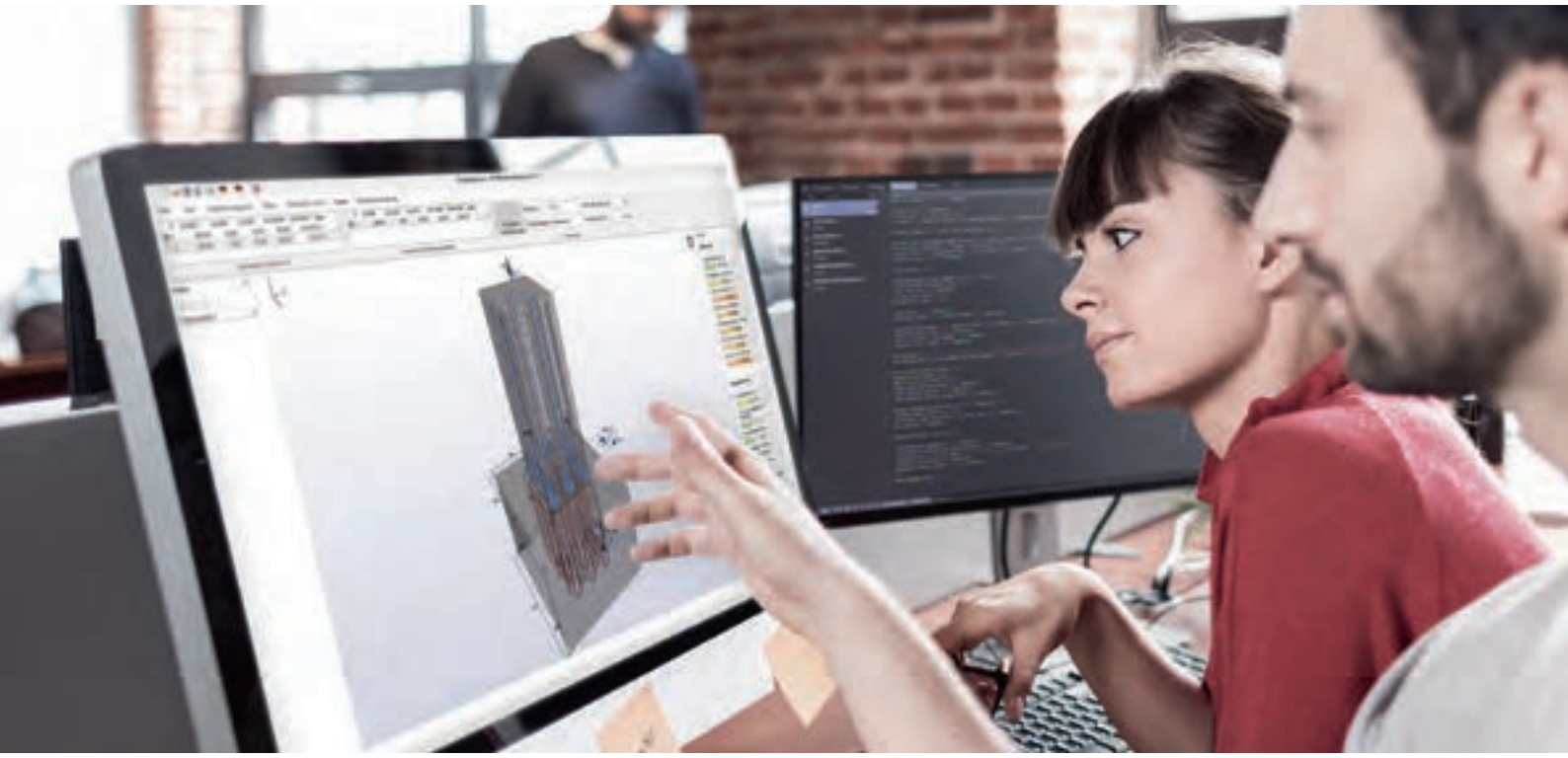

For your technical support – free dimensioning software

The dimensioning software is available for use free of charge after a short registration procedure. You can quickly and easily design a particular product and create a verifiable printout using these modules.

Download the PFEIFER Suite now at:

www.pfeifer-suite.info

- Sandwich Anchor System
- PS-A Steel Bearing
- DB Anchors for permanent fixing
- VS® System
- Column Shoe System

Keyword index

A

Adapter **63**
Allround-Anchor kurz **21**
Allround Anchor long **20**
Anchor bolt G1-K **118**
Anchor Pin **278**
Anchor Plates **142**
Anchor Plates **143**
APL Anchor Plate **144**

B

Bar Anchor **28**
Bar Anchor cropped **29**
Bearing Anchor and Shear Connector **268**
Bearing Anchor and Shear Connector **269**
Bent female bar **289**
Bent female bar at special angle **291**
Bent Loop **91**
Bent male bar **300**
BHRW Replacement Beam long **321**
BHRW Replacement Beam short **320**
Bolt Anchor **33**
Bolt anchors for fasteners for push-pull props **156**
Brickwork Anchor **98**
Brickwork Anchor **101**
BS Anchor **90**
BS Capstan Ring **93**
BS Hook **92**
BS Moulding Insert **94**

C

Clip-on Pin **280**
Clip-On Stirrup **281**
Combination options – Assembly accessories **235**
Combination options – Threaded anchor system **65**
Combination options – Wire rope loop connections **201**
Component recommendations Screw connections **235**
Component recommendati-ons – Wire rope loop connections **201**
Concrete screws for fasteners for push-pull props **155**
Coupling Socket **303**
Cover Cap **54**
Cover Cap and External Cap for Lashing Anchor **111**
Cover Plate **56**
Cover Plate **234**
Cylinder Anchor **270**

D

D36 NT stair mandrel set **254**
Data Clips **44**
DB Attachment Point PSA **184**
DB Base Anchor **116**
DB Waved Anchor **117**
Delta Anchor **275**
Dimensioning tables – LCON **169**
Dimensioning tables – MoFi **160**
Dimensioning tables – Spherical Head Anchor **84**
Dimensioning table – Threaded Anchor **68**
Dimensioning table – Threaded Anchor for stairs **70**
Dimensioning table – Wire Rope Loop Anchor **96**
Doppelmuffenstab **292**
Double female bar **292**
Double female bar as U-shaped stirrup **293**
Double female bar with threaded connection bolt **295**
DR Anchor **74**
DR Anchor with eye **76**

E

End Anchoring Plate **309**
External Cap **59**
External Plate for Insert Anchor **127**
External Plate for threaded anchor system **58**

F

Fastener for Push-Pull Props **150**
Fastener for Push-Pull Props **151**
Fastener for push-pull props, MoFi **152**
Female bar in special design **288**
Female bar with threaded connection bolt **299**
Female bar with welded anchor plate **294**
Fixing bolt for MoFi **154**
Fixing Bolts for threaded anchor system **47**
Fixing Bolt Shallow without pin for lashing anchor **109**
Fixing Bracket System **166**
Fixing Bracket System **167**
Fixing Screw for Lashing Anchor **110**
Fixing screw for screw connection system **229**
Fixing Screw for spherical head anchor system **83**

F

Fixing Screw for threaded anchor system **50**
Fixing Screw for wire rope loop anchor system **95**
Flared Lifting Loop **35**
Flared lifting loop, tapered **37**
Flat Anchor **272**
Flat Steel Anchor **31**
Foundation anchor sets **222**
FS Box LIGHT approved **199**

H

HL Base Anchor **22**
HL Lifting Key **43**
HL Lifting Loop **38**
HL Waved Anchor **27**
Hooked female bar **290**
Hooked male bar **301**
Hybridbeam® **314**
Hybridbeam® **315**
Hybridbeam® BHM **316**
Hybridbeam® BHR **317**

I

IMC express anchor **135**
Individual components of D36 stair mandrel **255**
Insert Anchor **115**
Insert anchors **114**

L

Lashing Anchor **106**
Lashing anchor system **104**
Lashing Point **108**
LB anchor and lifting loop **100**
LCON Fixing Bracket **168**
Lifting Loop **34**
Lifting Loop, tapered **36**
Lift Mounting Anchor **174**
Lift Mounting Anchor **175**
Light-Weight Concrete Anchor **98**
Load Eye **176**
LSF Lifting Loop **177**
LSG Lifting Loop **179**
LSP Lifting Loop **180**
LSV Lifting Loop **178**

M

Magnet Fixing, MoFi **157**
Magnetic Disc **53**
Male Bar in special design **298**
Male bar in special length **298**
Male Bar with socket **294**
MAX express anchor **133**
MoFi fastener for push-pull props, assembled **153**
Moulding Insert, corner installation **230**
Moulding Insert, side installation **232**
Muffenstfor up toals U-Bügel **292**

N

Nail Disc and PH Nail Disc **311**
Nail Disc for Socket Dowel **125**
Nail Plug for Polyamide Socket **126**
NB footstep sound plate **252**
NF footstep sound plate **251**
NL footstep sound plate **250**

P

PAP Connect Bolt **226**
PCC Column Shoe **206**
PCC Positioning Socket **227**
PCC Retaining Bush **228**
PD stair mandrel **253**
Personal protection system **182**
Personal protection system **183**
PGS/G1-DK Foundation Anchor **217**
PGS/G1 Foundation Anchor **209**
PGS/G1-K Foundation Anchor **215**
PGS/G2 Foundation Anchor **210**
PGS/G2-K, G3-K and G4-K foundation anchors for PCC **216**
PGS/G3 Foundation Anchor **211**
PGS/H2 Foundation Anchor **218**
PGS/H4 Foundation Anchor **219**

P

PH-MU Female Bar **224**
Plastic Fixing. MoFi **158**
Plug. MoFi **159**
Polyamide Socket **124**
Positioning Connector **307**
PSA Eye Bolt **185**
PSA Fixing Bolt/Cover Cap **186**
PSA Recess Disc **187**
PS-A steel bearing, one-piece **240**
PVB/PGV Connect Bolt **225**
PWC Wall Shoe **208**
PWS Wall Shoe **207**

R

Recess Disc for threaded anchor system **51**
Reducing Bolt **305**
Reducing female bar **289**
Reducing Socket **306**
REI 120 fire protection sleeve for Schall-ISODORN HQW® **264**
Reinforcement continuity system **284**
Reinforcement continuity system **285**
Repair kit accessories **62**
Repair kit for slabs **60**
Repair kit for walls **61**
Replacement Beam **318**
Replacement Beam **319**
Reworking Screw **64**
Right-Left-Thread Connect Bolt **304**

S

SAS Lifting Loop **41**
Schall-ISOBOX TSB®-BT set **258**
Schall-ISOBOX TSB®-F **260**
Schall-ISOBOX TSB®-MB **259**
Schall-ISOBOX TSB®-T set **257**
Schall-ISODORN HQW® set **262**
Schall-ISODORN HQW® ST **263**
Screw connection system **204**
Screw connection system **205**
Selection aid – fixing bracket system **173**
Selection aid – Lift Mounting Anchor **181**
Socket **30**
Socket Dowel with angular end **123**
Socket Dowel with crimped end **121**
Socket Dowel with crimped end and nailing plate **122**
Socket Dowel with cross hole **119**
Socket Dowel with cross hole and nailing plate **120**
Sound insulation elements **248**
Sound insulation elements **249**
SPA Sandwich Panel Anchor **276**
Special Lifting Loop **40**
Spherical head anchor system **72**
Staircase bearing system **242**
Staircase bearing system **243**
Standard parts **138**
Standard parts **139**
Standard parts **140**
Steel anchors for subsequent fastening **128**
Steel anchors for subsequent fastening **129**
Steel Bearing **238**
Steel Bearing **239**
Straight Female Bar **286**
Straight female bar in special length **288**
Straight Male Bar **296**
Super Lifter **42**
Super Waved Anchor **26**
Swivel Eye **39**

T

Threaded anchor system **18**
Threaded Connection Bolt **302**
Thread protection plugs for foundation anchors **233**
Torque wrench **310**
To the free dimensioning software: **203**
TSB®-BK/BWK reinforcement cages for Schall-ISOBOXES **261**

U

UCS Concrete Screw **130**
UltraCut FBS II concrete screw **131**

V

VarioSonic SLE staircase end bearing **244**
VarioSonic SL intermediate staircase bearing **245**
VS®-accesories **200**
VS® Box CLASSIC constructive **198**
VS® Box EASYFILL constructive **197**
VS® BZ Rail approved **193**
VS® ISI Bar/Rail approved **192**
VS®-ISI-System3D fire prevention **202**
VS® Slim Box EASYFILL approved **196**
VS® T Bar/Rail constructive **194**
VS® W Rail constructive **195**

W

Waved Anchor long **23**
Waved Anchor short **25**
Welding Socket **308**
Wire rope loop anchor system **88**
Wire rope loop connections **190**
Wire rope loop connections **191**
with UP shim plate for PWC **222**
WK Anchor long **77**
WK Anchor short **78**
WK Bar Anchor **79**
WK Bar Anchor cropped **80**
WK Moulding Insert **82**
WK Quicklift **81**

International

Sales
+49 (0) 83 31-937-231
Technical Support
+49 (0) 83 31-937-345

export-bt@pfeifer.de

www.pfeifer.info/concrete-inserts

03.22 | 507988